Elkay Hardwood 18-3/16" x 17-3/16" x 1" Cutting Board
Model(s) LKCB2616HW

PRODUCT SPECIFICATIONS

Elkay Hardwood 18-3/16" x 17-3/16" x 1" Cutting Board. Overall dimensions are 18-3/16" x 17-3/16" x 1". Made of Solid Maple (Hardwood).

Custom designed cutting boards are:

- Designed to securely lock into your sink or countertop opening providing confidence the board will not shift around during use.
- Manufactured from the finest hardwoods grown in a sustainable manner
- Properly sized according to your sink bowl, and built to provide years of daily use.

Cutting board is neither dishwasher nor microwave safe. Since most are designed to sit on the flange of the sink, they are not recommended for undermount sinks that have less than a 1/2" reveal.

Material:	Solid Maple (Hardwood)
Dimensions:	18-3/16" x 17-3/16" x 1"
Fits Bowl Size(s):	26-1/8" x 16-1/2"

A Century of Tradition and Quality.
For more than 100 years, Elkay has been making innovative products and providing exceptional customer care. We take pride in offering plumbing products that make life easier, inspire change and leave the world a better place.

Clean and Care Manual (PDF)
Clean and Care Manual (PDF)
Warranty (PDF)

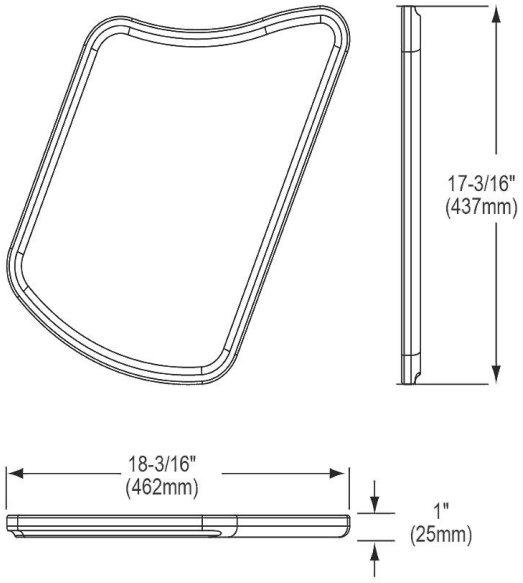

PART:_____QTY: _____

PROJECT:_____

CONTACT:_____

DATE:_____

NOTES:_____

APPROVAL:_____

In keeping with our policy of continuing product improvement, Elkay reserves the right to change product specifications without notice. Please visit elkay.com for the most current version of Elkay product specification sheets. This specification describes an Elkay product with design, quality, and functional benefits to the user. When making a comparison of other producers' offerings, be certain these features are not overlooked.

In keeping with our policy of continuing product improvement, Elkay reserves the right to change product specifications without notice. Please visit elkay.com for the most current version of Elkay product specification sheets. This specification describes an Elkay product with design, quality, and functional benefits to the user. When making a comparison of other producers' offerings, be certain these features are not overlooked.