ELKAY®
SPECIFICATIONS

Elkay 8" Centerset with Exposed Deck Faucet with 10" High Arc Spout 6" Wristblade Handles Chrome
Model(s) LK810HA10T6

PRODUCT SPECIFICATIONS

Elkay 8" Centerset with Exposed Deck Faucet with 10" High Arc Spout 6" Wristblade Handles Chrome. Faucet has a flow rate of 1.5 GPM, and is made of Chrome-plated Brass material, with a Quarter Turn Ceramic Disc valve. Faucet requires 3 faucet holes.

Mounting Type:	Deck Mount
Special Features:	Low Flow Solid Brass Construction Spout Swing Restriction Pin
Finish:	Chrome (CR)
Handle Type:	6" Wristblade Handle
Deck Clearance:	7-13/16"
Spout Reach:	10"
Spout Height:	10-5/16"
Hole Drillings:	3
Material:	Chrome-plated Brass
Valve Type:	Quarter Turn Ceramic Disc
Valve Connection:	1/2" NPSM Male
Flow Rate:	1.5 GPM
Faucet Hole Size (min):	1-3/8"
Faucet Hole Spread:	8
Spout Type:	High Arc

Chrome (CR)

A Century of Tradition and Quality.
For more than 100 years, Elkay has been making innovative products and providing exceptional customer care. We take pride in offering plumbing products that make life easier, inspire change and leave the world a better place.

Product Compliance: ADA & ICC A117.1
ASME A112.18.1/CSA B125.1
CEC
NSF 372 (lead free)
NSF 61 (Q≤1)

Complies with ADA & ICC A117.1 accessibility requirements when installed according to the requirements outlined in these standards.

Clean and Care Manual (PDF)
Installation Instructions (PDF) - A55483
Warranty (PDF)

PART:_____QTY: _____

PROJECT:_____

CONTACT:_____

DATE:_____

NOTES:_____

APPROVAL:_____

In keeping with our policy of continuing product improvement, Elkay reserves the right to change product specifications without notice. Please visit elkay.com for the most current version of Elkay product specification sheets. This specification describes an Elkay product with design, quality, and functional benefits to the user. When making a comparison of other producers' offerings, be certain these features are not overlooked.

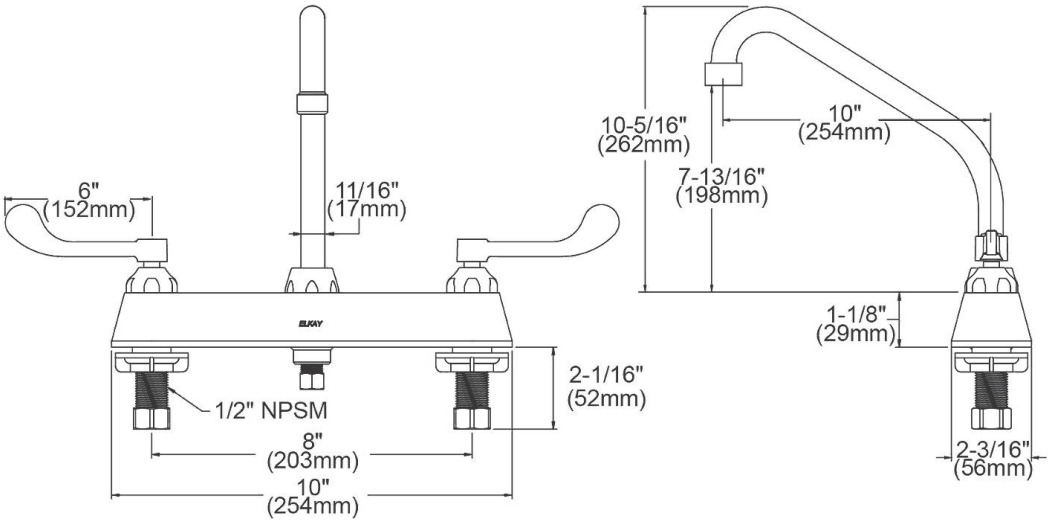

In keeping with our policy of continuing product improvement, Elkay reserves the right to change product specifications without notice. Please visit elkay.com for the most current version of Elkay product specification sheets. This specification describes an Elkay product with design, quality, and functional benefits to the user. When making a comparison of other producers' offerings, be certain these features are not overlooked.

Elkay 8" Centerset with Exposed Deck Faucet with 10" High Arc Spout 6" Wristblade Handles Chrome

Model(s) LK810HA10T6

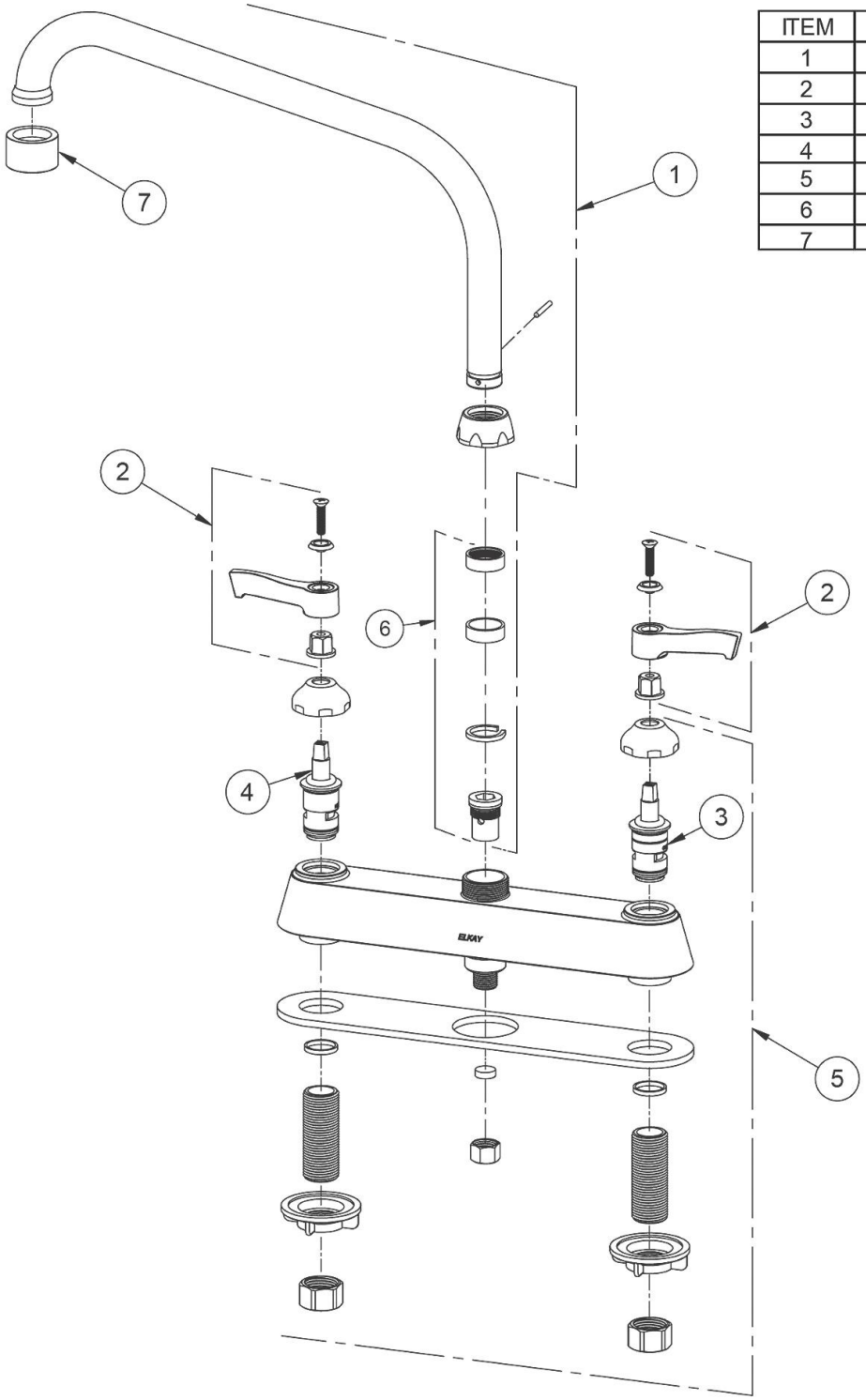

ITEM	IND. PART	DESCRIPTION
1	A55445	Spout
2	45920C	Handle, 6"
3	45923C	Right Cold Cartridge
4	45924C	Left Hot Cartridge
5	45914C	Body
6	98554C	Backflow Kit
7	LK734	2.2 GPM VR Aerator

In keeping with our policy of continuing product improvement, Elkay reserves the right to change product specifications without notice. Please visit elkay.com for the most current version of Elkay product specification sheets. This specification describes an Elkay product with design, quality, and functional benefits to the user. When making a comparison of other producers' offerings, be certain these features are not overlooked.