ELKAY®
SPECIFICATIONS

Elkay® Single Hole with Single Control Faucet with 8" Gooseneck Spout 4" Wristblade Handle Chrome
Model(s) LK535GN08T4

PRODUCT SPECIFICATIONS

Elkay® Single Hole with Single Control Faucet with 8" Gooseneck Spout 4" Wristblade Handle Chrome. Faucet has a flow rate of 1.5 GPM, and is made of Chrome-plated Brass material, with a Quarter Turn Ceramic Disc - Cold valve. Faucet requires 1 faucet holes.

Mounting Type:	Deck Mount
Special Features:	Low Flow Solid Brass Construction Spout Swing Restriction Pin
Finish:	Chrome (CR)
Handle Type:	4" Wristblade Handle
Deck Clearance:	11-1/8"
Spout Reach:	8"
Spout Height:	16-11/16"
Hole Drillings:	1
Material:	Chrome-plated Brass
Valve Type:	Quarter Turn Ceramic Disc - Cold
Valve Connection:	1/2"-14 NPSM
Flow Rate:	1.5 GPM
Faucet Hole Size (min):	1-3/8"
Spout Type:	Gooseneck

Special Note: 1.5 GPM VR aerator installed with 2.2 and .5 GPM inserts included

Chrome (CR)

A Century of Tradition and Quality.
For more than 100 years, Elkay has been making innovative products and providing exceptional customer care. We take pride in offering plumbing products that make life easier, inspire change and leave the world a better place.

Product Compliance:
ADA & ICC A117.1
ASME A112.18.1/CSA B125.1
CEC
NSF 372 (lead free)
NSF 61 (Q≤1)

Complies with ADA & ICC A117.1 accessibility requirements when installed according to the requirements outlined in these standards.

Clean and Care Manual (PDF)
Installation Instructions (PDF) - A55483
Warranty (PDF)

PART:_____QTY: _____
PROJECT:_____
CONTACT:_____
DATE:_____
NOTES:_____
APPROVAL:

In keeping with our policy of continuing product improvement, Elkay reserves the right to change product specifications without notice. Please visit elkay.com for the most current version of Elkay product specification sheets. This specification describes an Elkay product with design, quality, and functional benefits to the user. When making a comparison of other producers' offerings, be certain these features are not overlooked.

Elkay® Single Hole with Single Control Faucet with 8" Gooseneck Spout 4" Wristblade Handle Chrome

Model(s) LK535GN08T4

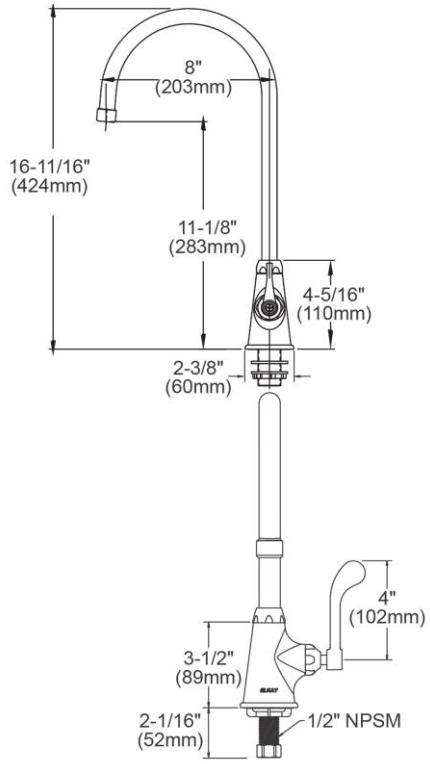

In keeping with our policy of continuing product improvement, Elkay reserves the right to change product specifications without notice. Please visit elkay.com for the most current version of Elkay product specification sheets. This specification describes an Elkay product with design, quality, and functional benefits to the user. When making a comparison of other producers' offerings, be certain these features are not overlooked.