ELKAY®
SPECIFICATIONS

Elkay Single Hole with Concealed Deck Faucet with 8" High Arc Spout 2" Lever Handles Chrome

Model(s) LK500HA08L2

PRODUCT SPECIFICATIONS

Elkay Single Hole with Concealed Deck Faucet with 8" High Arc Spout 2" Lever Handles Chrome. Faucet has a flow rate of 1.5 GPM, and is made of Chrome-plated Brass material, with a Quarter Turn Ceramic Disc valve. Faucet requires 1 faucet holes.

Mounting Type:	Deck Mount
Special Features:	Low Flow Solid Brass Construction Spout Swing Restriction Pin
Finish:	Chrome (CR)
Handle Type:	2" Lever Handle
Deck Clearance:	9-3/8"
Spout Reach:	8"
Spout Height:	11-5/8"
Hole Drillings:	1
Material:	Chrome-plated Brass
Valve Type:	Quarter Turn Ceramic Disc
Valve Connection:	1 1/8" Unified Screw Thread, Standard Series
Flow Rate:	1.5 GPM
Faucet Hole Size (min):	1-1/2"
Countertop Thickness:	1-1/4
Spout Type:	High Arc

Special Note: 1.5 GPM VR aerator installed with 2.2 and .5 GPM inserts included

Chrome (CR)

A Century of Tradition and Quality.
For more than 100 years, Elkay has been making innovative products and providing exceptional customer care. We take pride in offering plumbing products that make life easier, inspire change and leave the world a better place.

Product Compliance: NSF 372 (lead free)
NSF 61 (Q≤1)
ADA & ICC A117.1
ASME A112.18.1/CSA B125.1
CEC

Complies with ADA & ICC A117.1 accessibility requirements when installed according to the requirements outlined in these standards.

Clean and Care Manual (PDF)
Installation Instructions (PDF) - A55483
Warranty (PDF)

PART:_____QTY: _____

PROJECT:_____

CONTACT:_____

DATE:_____

NOTES:_____

APPROVAL:

In keeping with our policy of continuing product improvement, Elkay reserves the right to change product specifications without notice. Please visit elkay.com for the most current version of Elkay product specification sheets. This specification describes an Elkay product with design, quality, and functional benefits to the user. When making a comparison of other producers' offerings, be certain these features are not overlooked.

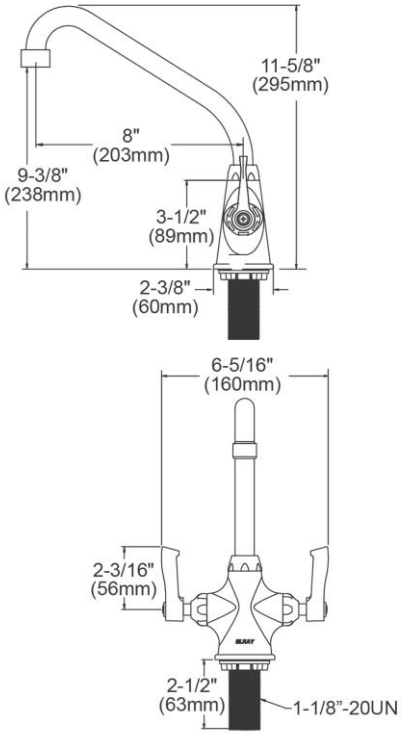

In keeping with our policy of continuing product improvement, Elkay reserves the right to change product specifications without notice. Please visit elkay.com for the most current version of Elkay product specification sheets. This specification describes an Elkay product with design, quality, and functional benefits to the user. When making a comparison of other producers' offerings, be certain these features are not overlooked.

Elkay Single Hole with Concealed Deck Faucet with 8" High Arc Spout 2" Lever Handles Chrome

Model(s) LK500HA08L2

ITEM	IND. PART	DESCRIPTION
1	A55446	Spout
2	45918C	Handle, 2"
3	45923C	Right Cold Cartridge
4	45924C	Left Hot Cartridge
5	45915C	Body
6	LK734	2.2 GPM VR Aerator

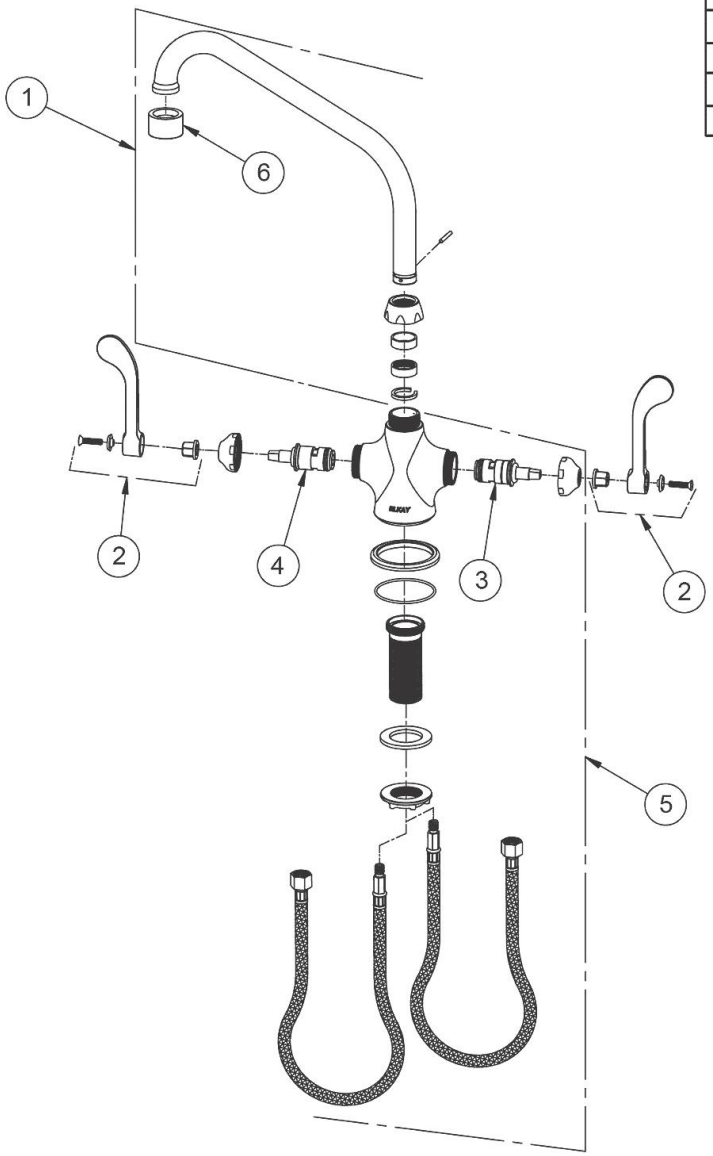

In keeping with our policy of continuing product improvement, Elkay reserves the right to change product specifications without notice. Please visit elkay.com for the most current version of Elkay product specification sheets. This specification describes an Elkay product with design, quality, and functional benefits to the user. When making a comparison of other producers' offerings, be certain these features are not overlooked.