ELKAY®
SPECIFICATIONS

Elkay Stainless Steel 96" x 20" x 8" Wall Hung Multiple Station Hand Wash Sink
Model(s) EWMA96208

PRODUCT SPECIFICATIONS

Elkay Stainless Steel 96" x 20" x 8" Wall Hung Multiple Station Hand Wash Sink. Sink is manufactured from 14 gauge 304 Stainless Steel with a Buffed Satin finish, Center drain placement.

Material:	304 Stainless Steel
Finish:	Buffed Satin
Gauge:	14
Number of Bowls:	1
Sink Dimensions:	96" x 20" x 25-3/4"
Bowl 1 Dimensions:	93" x 16-1/2" x 8"
Drainboard Location:	No drainboard
Backsplash Height:	10
Drain Size:	3-1/2" (89mm)
Drain Location:	Center

Hole Drilling Configurations:

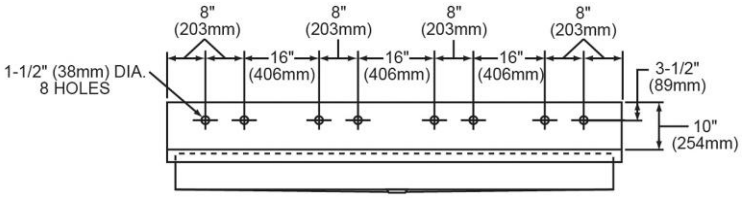

A Century of Tradition and Quality.
For more than 100 years, Elkay has been making innovative products and providing exceptional customer care. We take pride in offering plumbing products that make life easier, inspire change and leave the world a better place.

Product Compliance: ASME A112.19.3/CSA B45.4

Sinks are listed by IAPMO® as meeting the applicable requirements of the Uniform Plumbing Code®, International Plumbing Code®, and National Plumbing Code of Canada.

Clean and Care Manual (PDF)
Installation Instructions (PDF) - 2000000714
Warranty (PDF)

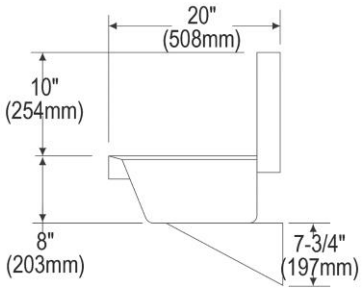

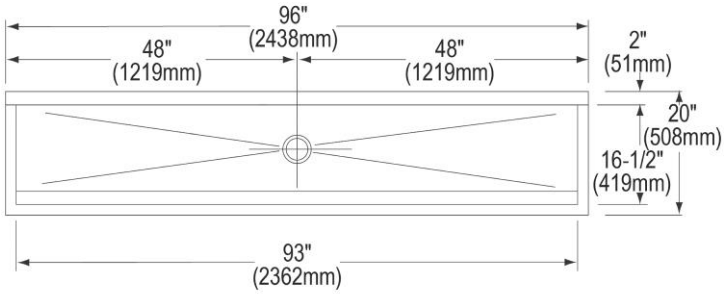

PART:_____QTY: _____
PROJECT:_____
CONTACT:_____
DATE:_____
NOTES:_____
APPROVAL:_____

In keeping with our policy of continuing product improvement, Elkay reserves the right to change product specifications without notice. Please visit elkay.com for the most current version of Elkay product specification sheets. This specification describes an Elkay product with design, quality, and functional benefits to the user. When making a comparison of other producers' offerings, be certain these features are not overlooked.

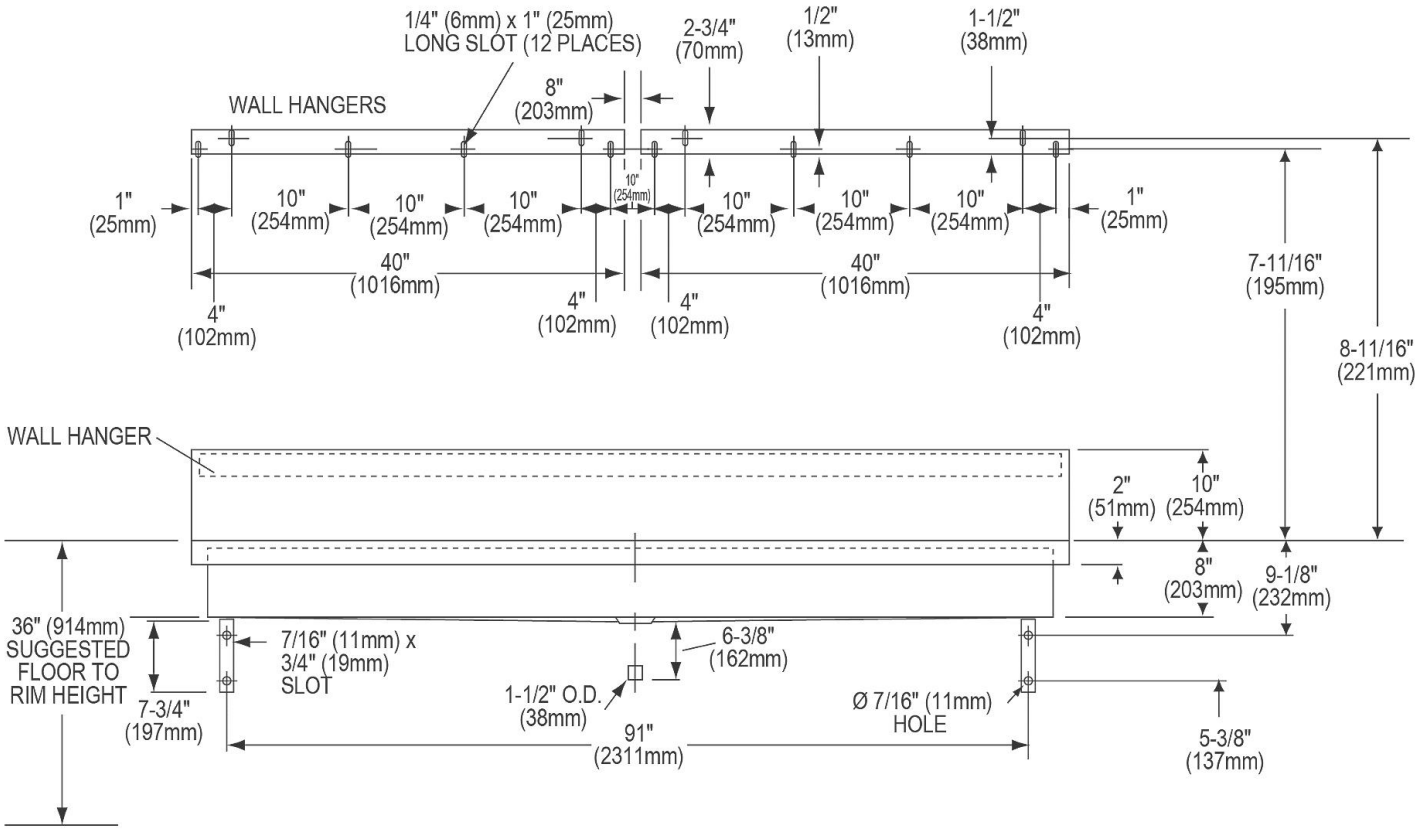

In keeping with our policy of continuing product improvement, Elkay reserves the right to change product specifications without notice. Please visit elkay.com for the most current version of Elkay product specification sheets. This specification describes an Elkay product with design, quality, and functional benefits to the user. When making a comparison of other producers' offerings, be certain these features are not overlooked.