ELKAY®
SPECIFICATIONS

Elkay Crosstown 18 Gauge Stainless Steel 33" x 22" x 6" Equal Double Bowl Dual Mount ADA Sink Kit
Model(s) ECTSRAD33226BG

PRODUCT SPECIFICATIONS

Elkay Crosstown® 18 Gauge Stainless Steel 33" x 22" x 6", Equal Double Bowl Dual Mount ADA Sink Kit. Sink is manufactured from 18 gauge 304 Stainless Steel with a Polished Satin finish, Rear Center drain placement, and Full spray sides and bottom with Sides and Bottom pads.

Installation Type:	Drop-in, Sink Kits, Undermount
Material:	304 Stainless Steel
Special Features:	Slim Rim
Finish:	Polished Satin
Gauge:	18
Sound Deadening:	Full spray sides and bottom with Sides and Bottom pads
Number of Bowls:	2
Sink Dimensions:	33" x 22" x 6"
Bowl 1 Dimensions:	14-3/4" x 16-3/4" x 6"
Bowl 2 Dimensions:	14-3/4" x 16-3/4" x 6"
Drain Size:	3-1/2" (89mm)
Drain Location:	Rear Center
Minimum Cabinet Size:	36"
Mounting Hardware:	Part # 64090022 included for drop-in installation for countertops thicker than 3/4" (19mm) up to 1-1/2" (38.1mm) thick.
Template Included:	Yes
Cutout Template #:	1000001180

Template is available for download at elkay.com. CAD software will be required to open the template.

Cutout Dimensions for Drop-in Installation:
32-3/8" x 21-3/8" (822mm x 543mm) with 1/2" (12mm) corner radius

Hole Drilling Configurations:

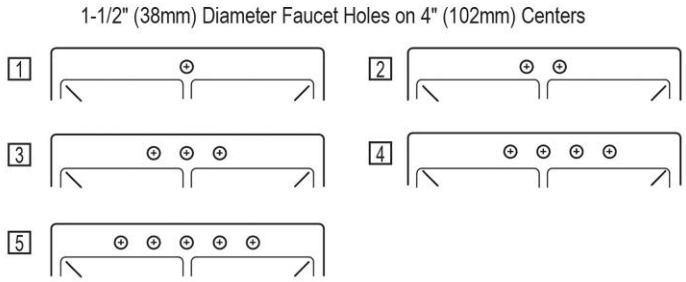

Included with Product: **ECTSRAD33226 sink, two CTOBG1315SS bottom grids**

AMERICAN PRIDE. A LIFETIME TRADITION.
Like your family, the Elkay family has values and traditions that endure. For almost a century, Elkay has been a family-owned and operated company, providing thousands of jobs that support our families and communities.

Product Compliance: ADA & ICC A117.1
ASME A112.19.3/CSA B45.4

Complies with ADA & ICC A117.1 accessibility requirements when installed according to the requirements outlined in these standards.

Clean and Care Manual (PDF)
Installation Instructions (PDF) - 1000005237
Limited Lifetime Warranty (PDF)

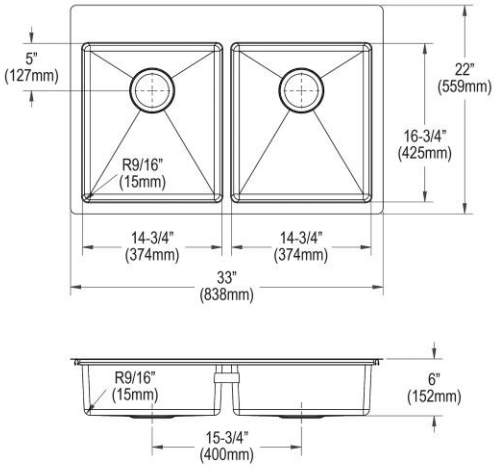

PART:_____QTY: _____
PROJECT:_____
CONTACT:_____
DATE:_____
NOTES:_____
APPROVAL:_____

In keeping with our policy of continuing product improvement, Elkay reserves the right to change product specifications without notice. Please visit elkay.com for the most current version of Elkay product specification sheets. This specification describes an Elkay product with design, quality, and functional benefits to the user. When making a comparison of other producers' offerings, be certain these features are not overlooked.

Installation Profile:

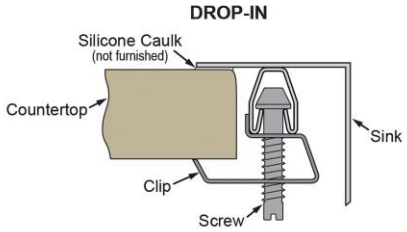

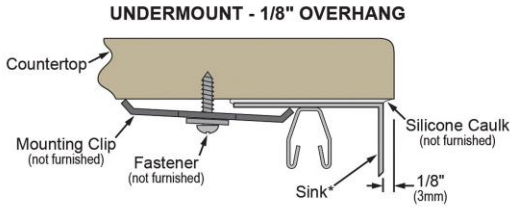

Optional Accessories		
LK35	Elkay 3-1/2" Drain Fitting Type 304 Stainless Steel Body Strainer Basket and Tailpiece Spec Sheet (PDF)	
LKAD35	Elkay 3-1/2" Drain Fitting" Stainless Steel Body Strainer Basket and Offset Tailpiece Spec Sheet (PDF)	

In keeping with our policy of continuing product improvement, Elkay reserves the right to change product specifications without notice. Please visit elkay.com for the most current version of Elkay product specification sheets. This specification describes an Elkay product with design, quality, and functional benefits to the user. When making a comparison of other producers' offerings, be certain these features are not overlooked.