ELKAY®
SPECIFICATIONS

Elkay Pacemaker Stainless Steel 22" x 22" x 7-1/8" Single Bowl Top Mount Sink
Model(s) PSRQ2222

PRODUCT SPECIFICATIONS

Elkay Pacemaker Stainless Steel 22" x 22" x 7-1/8", Single Bowl Top Mount Sink. Sink is manufactured from 20 gauge 304 Stainless Steel with a Brilliant Satin finish, Center drain placement, and Full spray sides and bottom.

Installation Type:	Top Mount
Material:	304 Stainless Steel
Special Features:	Quick-Clip Mounting System
Finish:	Brilliant Satin
Gauge:	20
Sound Deadening:	Full spray sides and bottom
Number of Bowls:	1
Sink Dimensions:	22" x 22" x 7-1/8"
Bowl 1 Dimensions:	19" x 16" x 7"
Drain Size:	3-1/2" (89mm)
Drain Location:	Center
Minimum Cabinet Size:	27"
Mounting Hardware:	Included for 3/4" (19mm) countertop
Cutout Template #:	1000001248

Template is available for download at elkay.com

Cutout Dimensions for Top Mount Installation:
21-3/8" x 21-3/8" (543mm x 543mm) with 1-1/2" (38mm) corner radius

Hole Drilling Configurations:

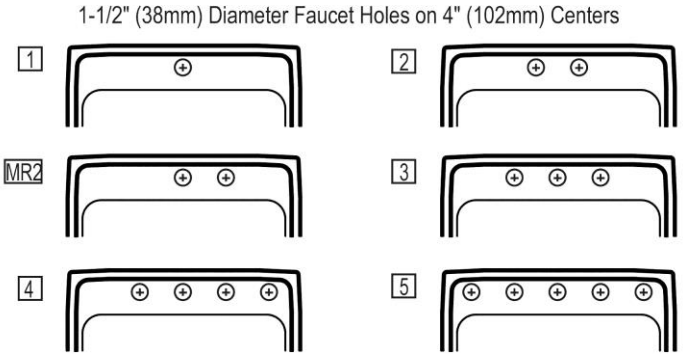

Installation Profile:

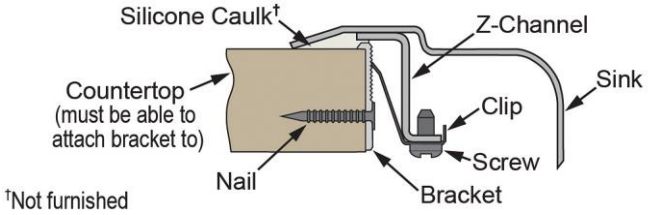

AMERICAN PRIDE. A LIFETIME TRADITION.
Like your family, the Elkay family has values and traditions that endure. For almost a century, Elkay has been a family-owned and operated company, providing thousands of jobs that support our families and communities.

Sinks are listed by IAPMO® as meeting the applicable requirements of the Uniform Plumbing Code®, International Plumbing Code®, and National Plumbing Code of Canada.

Product Compliance: ASME A112.19.3/CSA B45.4
BUY AMERICAN ACT

Clean and Care Manual (PDF)
Installation Instructions (PDF)
Limited Lifetime Warranty (PDF)

Similar models are available with: U Channel mounting system

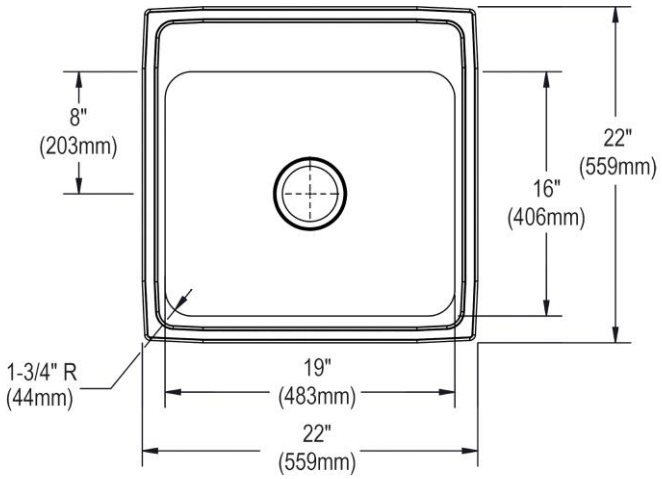

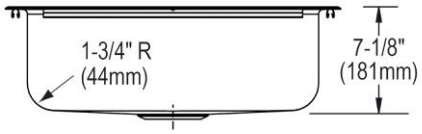

PART:_____QTY: _____

PROJECT:_____

CONTACT:_____

DATE:_____

NOTES:_____

APPROVAL:_____

In keeping with our policy of continuing product improvement, Elkay reserves the right to change product specifications without notice. Please visit elkay.com for the most current version of Elkay product specification sheets. This specification describes an Elkay product with design, quality, and functional benefits to the user. When making a comparison of other producers' offerings, be certain these features are not overlooked.

© 2016
PSRQ2222_spec.pdf

Elkay Pacemaker Stainless Steel 22" x 22" x 7-1/8" Single Bowl Top Mount Sink
Model(s) PSRQ2222

OPTIONAL ACCESSORIES

Cutting Board:	CB1713, CBS1316
Drain:	LK99
Faucet:	LKGT1041, LKGT2041
Rinsing Basket:	LKWRB1418SS
Sinkmate:	LKSM17, LKSMHOOK, LKSMSPONGE, LKSMHSL
Soap Dispenser:	LKGT1054

In keeping with our policy of continuing product improvement, Elkay reserves the right to change product specifications without notice. Please visit elkay.com for the most current version of Elkay product specification sheets. This specification describes an Elkay product with design, quality, and functional benefits to the user. When making a comparison of other producers' offerings, be certain these features are not overlooked.

© 2016