neptune by ELKAY

SPECIFICATIONS

Elkay Neptune Stainless Steel 43" x 22" x 8-1/8" Triple Bowl Top Mount Sink

Model(s) NMRB43224

PRODUCT SPECIFICATIONS

Elkay Neptune Stainless Steel 43" x 22" x 8-1/8", Triple Bowl Top Mount Sink. Sink is manufactured from 20 gauge 300 series Stainless Steel with a Brilliant finish, Center drain placement, and Bottom only spray.

Installation Type:	Top Mount
Material:	300 series Stainless Steel
Finish:	Brilliant
Gauge:	20
Sound Deadening:	Bottom only spray
Number of Bowls:	3
Sink Dimensions:	43" x 22" x 8-1/8"
Bowl 1 Dimensions:	13-1/2" x 18" x 8"
Bowl 2 Dimensions:	10" x 12" x 5"
Bowl 3 Dimensions:	13-1/2" x 18" x 8"
Drain Size:	3-1/2" (89mm)
Drain Location:	Center
Minimum Cabinet Size:	48"
Mounting Hardware:	Part # 64090014 included for countertops up to 3/4" (19mm) thick
Cutout Template #:	1000001286

Template is available for download at elkay.com

Cutout Dimensions for Top Mount Installation:
42-3/8" x 21-3/8" (1076mm x 543mm) with 1-1/2" (38mm) corner radius

Installation Profile:

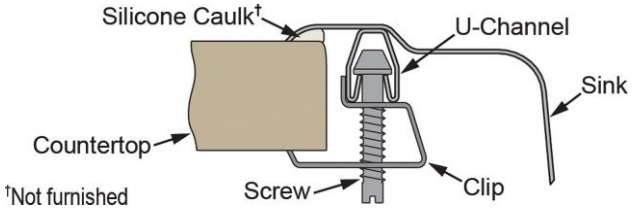

OPTIONAL ACCESSORIES

Bottom Grid:	GBG1318SS
Hardware:	LK364, LK463
Sinkmate:	LKSMHSL

AMERICAN PRIDE. A LIFETIME TRADITION.
Like your family, the Elkay family has values and traditions that endure. For almost a century, Elkay has been a family-owned and operated company, providing thousands of jobs that support our families and communities.

Product Compliance: ASME A112.19.3/CSA B45.4
BUY AMERICAN ACT

Sinks are listed by IAPMO® as meeting the applicable requirements of the Uniform Plumbing Code®, International Plumbing Code®, and National Plumbing Code of Canada.

Clean and Care Manual (PDF)
Installation Instructions (PDF)
Limited Lifetime Warranty (PDF)

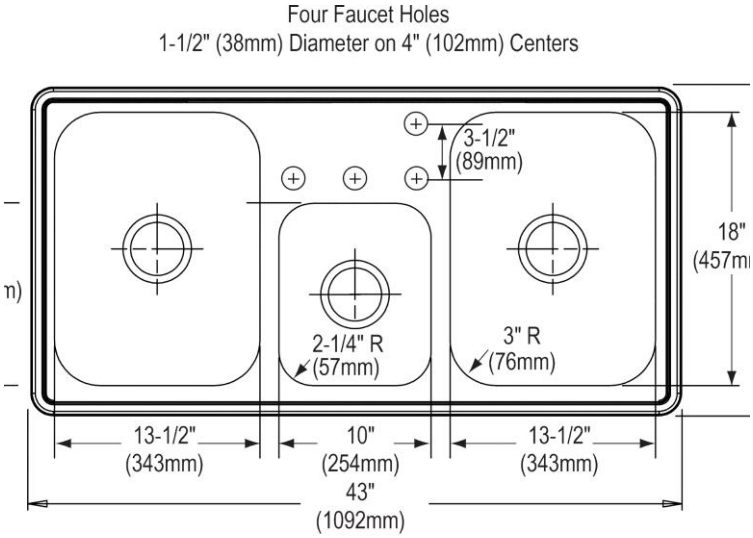

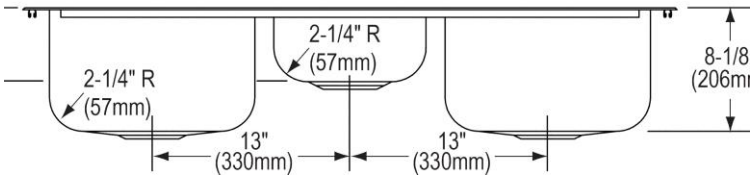

PART:_____QTY: _____

PROJECT:_____

CONTACT:_____

DATE:_____

NOTES:_____

APPROVAL:_____

In keeping with our policy of continuing product improvement, Elkay reserves the right to change product specifications without notice. Please visit elkay.com for the most current version of Elkay product specification sheets. This specification describes an Elkay product with design, quality, and functional benefits to the user. When making a comparison of other producers' offerings, be certain these features are not overlooked.