ELKAY®
SPECIFICATIONS

Elkay Gourmet Stainless Steel 17" x 22" x 7-5/8" Single Bowl Top Mount Sink
Model(s) LRQ1722

PRODUCT SPECIFICATIONS

Elkay Gourmet Stainless Steel 17" x 22" x 7-5/8" Single Bowl Top Mount Sink. Overall dimensions are 17" x 22" x 7-5/8". Sink is manufactured from 18 gauge 304 Stainless Steel with a Lustrous Highlighted Satin finish, Center drain placement, and Full spray sides and bottom.

Installation Type:	Top Mount
Material:	304 Stainless Steel
Special Features:	Quick-Clip Mounting System
Finish:	Lustrous Highlighted Satin
Gauge:	18
Sound Deadening:	Full spray sides and bottom
Number of Bowls:	1
Sink Dimensions:	17" x 22" x 7-5/8"
Bowl 1 Dimensions:	13-1/2" x 16" x 7-1/2"
Drain Size:	3-1/2" (89mm)
Drain Location:	Center
Minimum Cabinet Size:	21"
Mounting Hardware:	Included for 3/4" (19mm) countertop
Cutout Template #:	1000001289

Template is available for download at elkay.com

Cutout Dimensions for Top Mount Installation:
16-3/8" x 21-3/8" (416mm x 543mm) with 1-1/2" (38mm) corner radius

Hole Drilling Configurations:

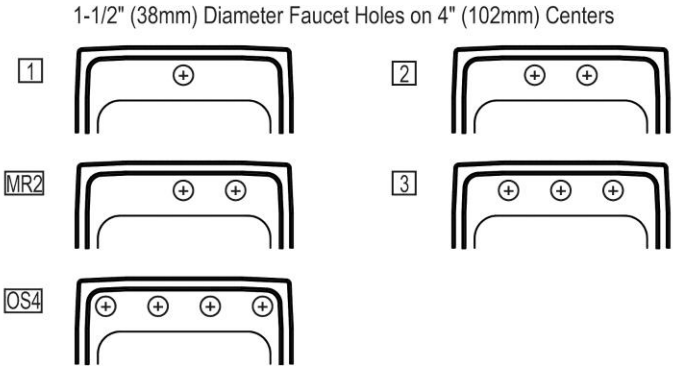

Installation Profile:

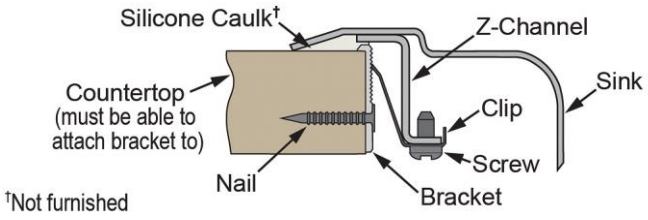

PART:_____QTY: _____

PROJECT:_____

CONTACT:_____

DATE:_____

NOTES:_____

APPROVAL:_____

AMERICAN PRIDE. A LIFETIME TRADITION.
Like your family, the Elkay family has values and traditions that endure. For almost a century, Elkay has been a family-owned and operated company, providing thousands of jobs that support our families and communities.

Sinks are listed by IAPMO® as meeting the applicable requirements of the Uniform Plumbing Code®, International Plumbing Code®, and National Plumbing Code of Canada.

Product Compliance: ASME A112.19.3/CSA B45.4
BUY AMERICAN ACT

Clean and Care Manual (PDF)
Installation Instructions (PDF)
Limited Lifetime Warranty (PDF)

Similar models are available with: extra deep bowls, U Channel mounting system

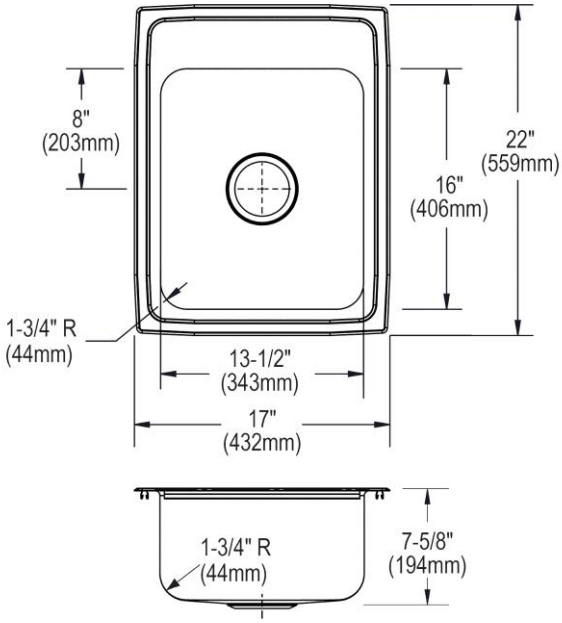

In keeping with our policy of continuing product improvement, Elkay reserves the right to change product specifications without notice. Please visit elkay.com for the most current version of Elkay product specification sheets. This specification describes an Elkay product with design, quality, and functional benefits to the user. When making a comparison of other producers' offerings, be certain these features are not overlooked.

2222 Camden Court
Oak Brook, IL 60523

© 2016

OPTIONAL ACCESSORIES

Bottom Grid:	LKWBG1316SS
Cutting Board:	CB1613, CB1713, CBR1316, CBS1316
Drain:	LK99
Faucet:	LKGT1041, LKGT2041
Rinsing Basket:	LKWRB1316SS, LKWERBSS
Sinkmate:	LKSM17, LKSMHOOK, LKSMSPONGE, LKSMHSL
Soap Dispenser:	LKGT1054

In keeping with our policy of continuing product improvement, Elkay reserves the right to change product specifications without notice. Please visit elkay.com for the most current version of Elkay product specification sheets. This specification describes an Elkay product with design, quality, and functional benefits to the user. When making a comparison of other producers' offerings, be certain these features are not overlooked.