ELKAY®
SPECIFICATIONS

# Elkay Lustertone® Classic Stainless Steel 22" x 19-1/2" x 7-5/8" 2-Hole Single Bowl Drop-in Sink + Faucet Kit
**Model(s) LR2219C**

## PRODUCT SPECIFICATIONS

Elkay Lustertone® Classic Stainless Steel 22" x 19-1/2" x 7-5/8" 2-Hole Single Bowl Drop-in Sink + Faucet Kit. Sink is manufactured from 18 gauge 304 Stainless Steel with a Lustrous Satin finish, Center drain placement, and Bottom only pads.

| | |
|---|---|
| **Installation Type:** | Drop-in, Sink Kits |
| **Material:** | 304 Stainless Steel |
| **Finish:** | Lustrous Satin |
| **Gauge:** | 18 |
| **Sound Deadening:** | Bottom only pads |
| **Number of Bowls:** | 1 |
| **Sink Dimensions:** | 22" x 19-1/2" x 7-5/8" |
| **Bowl 1 Dimensions:** | 18" x 14" x 7-1/2" |
| **Drain Size:** | 3-1/2" (89mm) |
| **Drain Location:** | Center |
| **Minimum Cabinet Size:** | 27" |
| **Mounting Hardware:** | Part # 64090012 included for countertops up to 3/4" (19mm) thick |
| **Template Included:** | No |
| **Cutout Template #:** | 1000001255 |

*Template is available for download at elkay.com. CAD software will be required to open the template.*

**Cutout Dimensions for Drop-in Installation:**
21-3/8" x 18-7/8" (543mm x 479mm) with 1-1/2" (38mm) corner radius

**Installation Profile:**

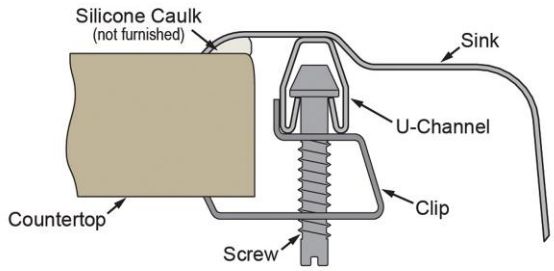

**Included with Product:** **LK406GN04T4C faucet, LK18B drain, LK500 P-trap.**

A Century of Tradition and Quality.
For more than 100 years, Elkay has been making innovative products and providing exceptional customer care. We take pride in offering plumbing products that make life easier, inspire change and leave the world a better place.

KBB READERS' CHOICE AWARDS 2023

BUILT IN USA OF DOMESTIC AND FOREIGN PARTS

**Product Compliance:**
Faucet: ASME A112.19.3/CSA B45.4
ASME A112.18.1/CSA B125.1
CEC
NSF 372 (lead free)
NSF 61
Accessory: ASME A112.18.2/CSA B125.2

Clean and Care Manual (PDF)
Installation Instructions (PDF) - 1000005236
Installation Instructions (PDF) - 1000005235_drain
Installation Instructions (PDF) - A55483_Faucet
Warranty (PDF)

PART:_____QTY: _____
PROJECT:_____
CONTACT:_____
DATE:_____
NOTES:_____
APPROVAL:_____

*In keeping with our policy of continuing product improvement, Elkay reserves the right to change product specifications without notice. Please visit elkay.com for the most current version of Elkay product specification sheets. This specification describes an Elkay product with design, quality, and functional benefits to the user. When making a comparison of other producers' offerings, be certain these features are not overlooked.*

| Included Accessories | | |
|---|---|---|
| LK406GN04T4C | Elkay 4" Centerset with Exposed Deck Faucet with 4" Gooseneck Spout 4" Wristblade Handle+Drain<br>Spec Sheet (PDF) | |
| LK500 | Elkay® P-Trap with Cleanout Plug<br>Spec Sheet (PDF) | |

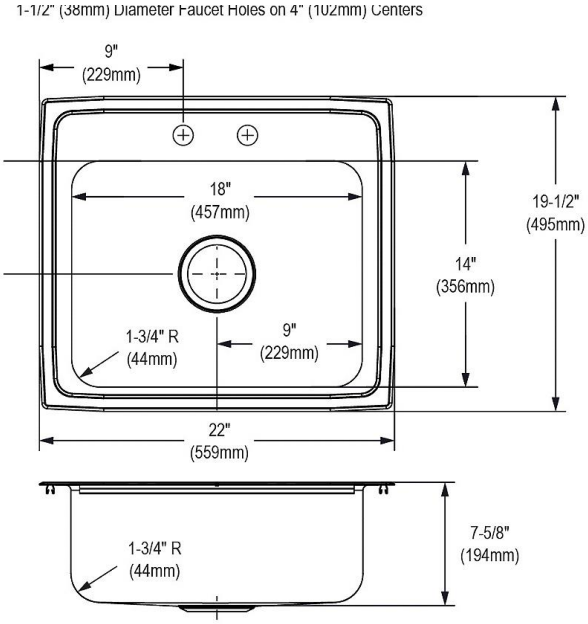


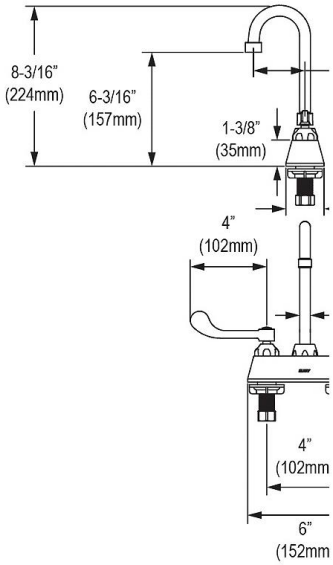


| Optional Accessories | | |
|---|---|---|
| LKGT1041 | Elkay Gourmet Single Hole Kitchen Faucet Pull-out Spray and Lever Handle with Hi and Mid-rise Base Options<br>Spec Sheet (PDF) | NO IMAGE AVAILABLE |

*In keeping with our policy of continuing product improvement, Elkay reserves the right to change product specifications without notice. Please visit elkay.com for the most current version of Elkay product specification sheets. This specification describes an Elkay product with design, quality, and functional benefits to the user. When making a comparison of other producers' offerings, be certain these features are not overlooked.*