ELKAY®
SPECIFICATIONS

Elkay 8" Centerset Exposed Deck Mount Faucet 44in Flexible Hose with 1.6 GPM Spray Head + 12" Arc Tube Spout 2" Lever Handles

Model(s) LK843AF12C

PRODUCT SPECIFICATIONS

Elkay 8" Centerset Exposed Deck Mount Faucet 44in Flexible Hose with 1.6 GPM Spray Head + 12" Arc Tube Spout 2" Lever Handles. Faucet has a flow rate of 1.5 GPM, and is made of Chrome-plated Brass material, with a Quarter Turn Ceramic Disc valve. Faucet requires 3 faucet holes.

A Century of Tradition and Quality.
For more than 100 years, Elkay has been making innovative products and providing exceptional customer care. We take pride in offering plumbing products that make life easier, inspire change and leave the world a better place.

Product Compliance: ADA & ICC A117.1
ASME A112.18.1/CSA B125.1
NSF 372 (lead free)
NSF 61 (Q≤1)

C ®

Clean and Care Manual (PDF)
Installation Instructions (PDF) - P99365
Warranty (PDF)

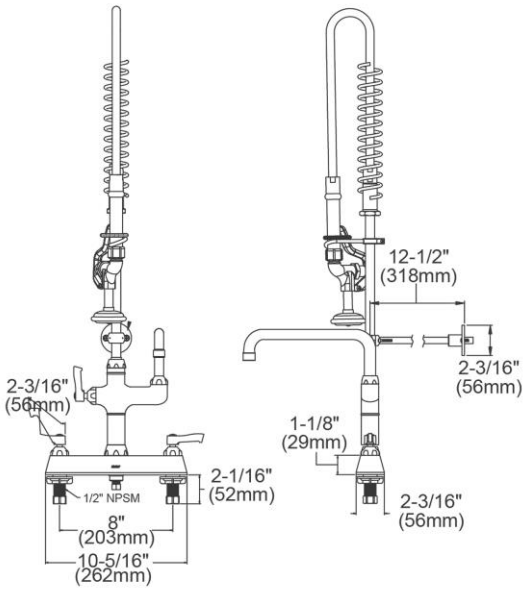

In keeping with our policy of continuing product improvement, Elkay reserves the right to change product specifications without notice. Please visit elkay.com for the most current version of Elkay product specification sheets. This specification describes an Elkay product with design, quality, and functional benefits to the user. When making a comparison of other producers' offerings, be certain these features are not overlooked.

PART:_____QTY: _____

PROJECT:_____

CONTACT:_____

DATE:_____

NOTES:_____

APPROVAL:

right to change product specifications without notice. Please visit elkay.com for the most current version of Elkay product specification sheets. This specification describes an Elkay product with design, quality, and functional benefits to the user. When making a comparison of other producers' offerings, be certain these features are not overlooked.

Elkay 8" Centerset Exposed Deck Mount Faucet 44in Flexible Hose with 1.6 GPM Spray Head + 12" Arc Tube Spout 2" Lever Handles

Model(s) LK843AF12C

Mounting Type:	Deck Mount
Special Features:	Low Flow Solid Brass Construction
Spray Type:	Pre Rinse
Finish:	Chrome (CR)
Handle Type:	Lever Handle
Deck Clearance:	6-1/2"
Spout Reach:	30"
Spout Height:	41-1/8"
Hole Drillings:	3
Material:	Chrome-plated Brass
Valve Type:	Quarter Turn Ceramic Disc
Valve Connection:	1/2"-14 NPT
Flow Rate:	1.5 GPM
Faucet Hole Size (min):	1-3/8"
Faucet Hole Spread:	8
Spout Swing Rotation:	360°
Spout Type:	Flexible Spout
Spray Functions:	Spray

Special Note: 1.6 GPM spray head

Chrome
(CR)

In keeping with our policy of continuing product improvement, Elkay reserves the right to change product specifications without notice. Please visit elkay.com for the most current version of Elkay product specification sheets. This specification describes an Elkay product with design, quality, and functional benefits to the user. When making a comparison of other producers' offerings, be certain these features are not overlooked.

Elkay 8" Centerset Exposed Deck Mount Faucet 44in Flexible Hose with 1.6 GPM Spray Head + 12" Arc Tube Spout 2" Lever Handles

Model(s) LK843AF12C

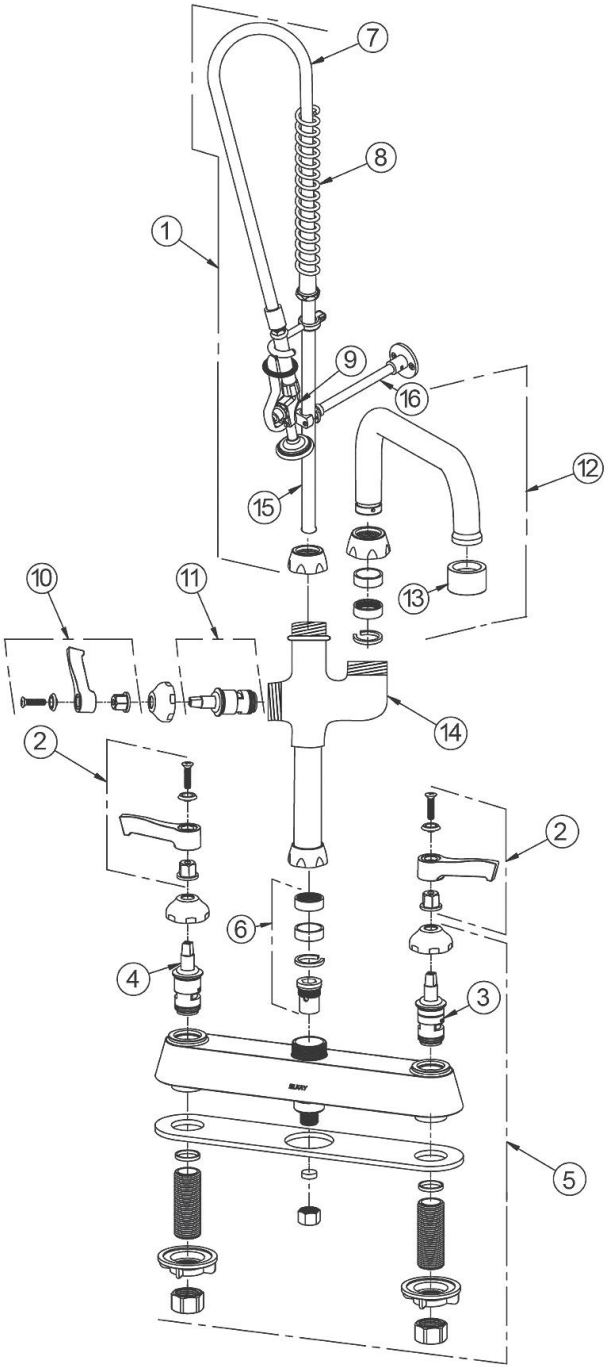

ITEM	IND. PART	DESCRIPTION
1	45938C	Pre-Rinse Assembly
2	45918C	Handle, 2"
3	45923C	Right Cold Cartridge
4	45924C	Left Hot Cartridge
5	45915C	Body
6	98554C	Backflow Kit
7	45943C	44" Hose
8	45944C	Spring
9	45942C	Spray Valve
10	A55385	Handle, 2"
11	P29121NL	Cartridge
12	A55399	Spout, 12"
13	LK734	2.2 GPM VR Aerator
14	45934C	Add On Faucet Body
15	45945C	Tall Riser
16	45946C	Support Rod

In keeping with our policy of continuing product improvement, Elkay reserves the right to change product specifications without notice. Please visit elkay.com for the most current version of Elkay product specification sheets. This specification describes an Elkay product with design, quality, and functional benefits to the user. When making a comparison of other producers' offerings, be certain these features are not overlooked.