SPECIFICATIONS

Concealed Deck Commercial Faucet
Models LK500GN04L2, LK500GN04T4, LK500GN04T6

FEATURES

Model LK500GN04L2
- One hole dual handle top mount faucet
- Quarter turn ceramic disc cartridge
- Solid brass construction
- Chrome finish
- 2.2 GPM VR aerator with 1.5 and .5 GPM inserts
- Includes spout swing restriction pin

Model LK500GN04T4
- Same as LK500GN04L2 except with 4” wrist blades handles

Model LK500GN04T6
- Same as LK500GN04L2 except with 6” wrist blades handles

COMPLIES WITH:
- ASME/ANSI A112.18.1
- CSA B125-01
- NSF/ANSI 61 Annex G
- ADA
- UPC/CUPC
- IAPMO Listed
- Certified AB1953

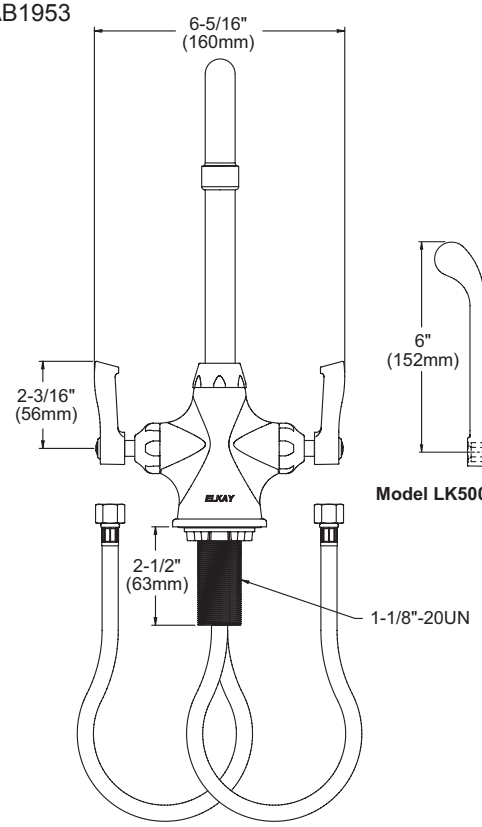

Model LK500AT08L2
FRONT VIEW

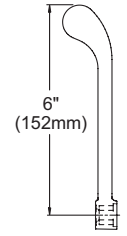

Model LK500AT08T6

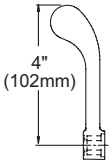

Model LK500AT08T4

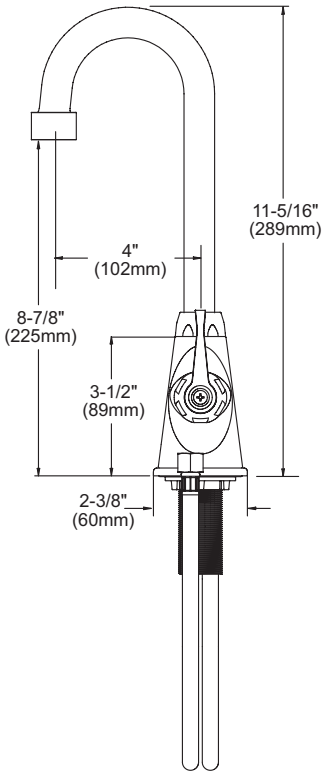

SIDE VIEW

Job Name:	**Item #:**
Notes:	
Architect/Engineer Approval:	**Date:**

SEE OTHER SIDE FOR REPLACEMENT PARTS

Elkay
elkayusa.com

2222 Camden Court, Oak Brook, IL 60523
1-630-574-8484 Fax: 1-630-574-4509

©2011 Elkay

REPLACEMENT PARTS

Concealed Deck Commercial Faucet
Models LK500GN04L2, LK500GN04T4, LK500GN04T6

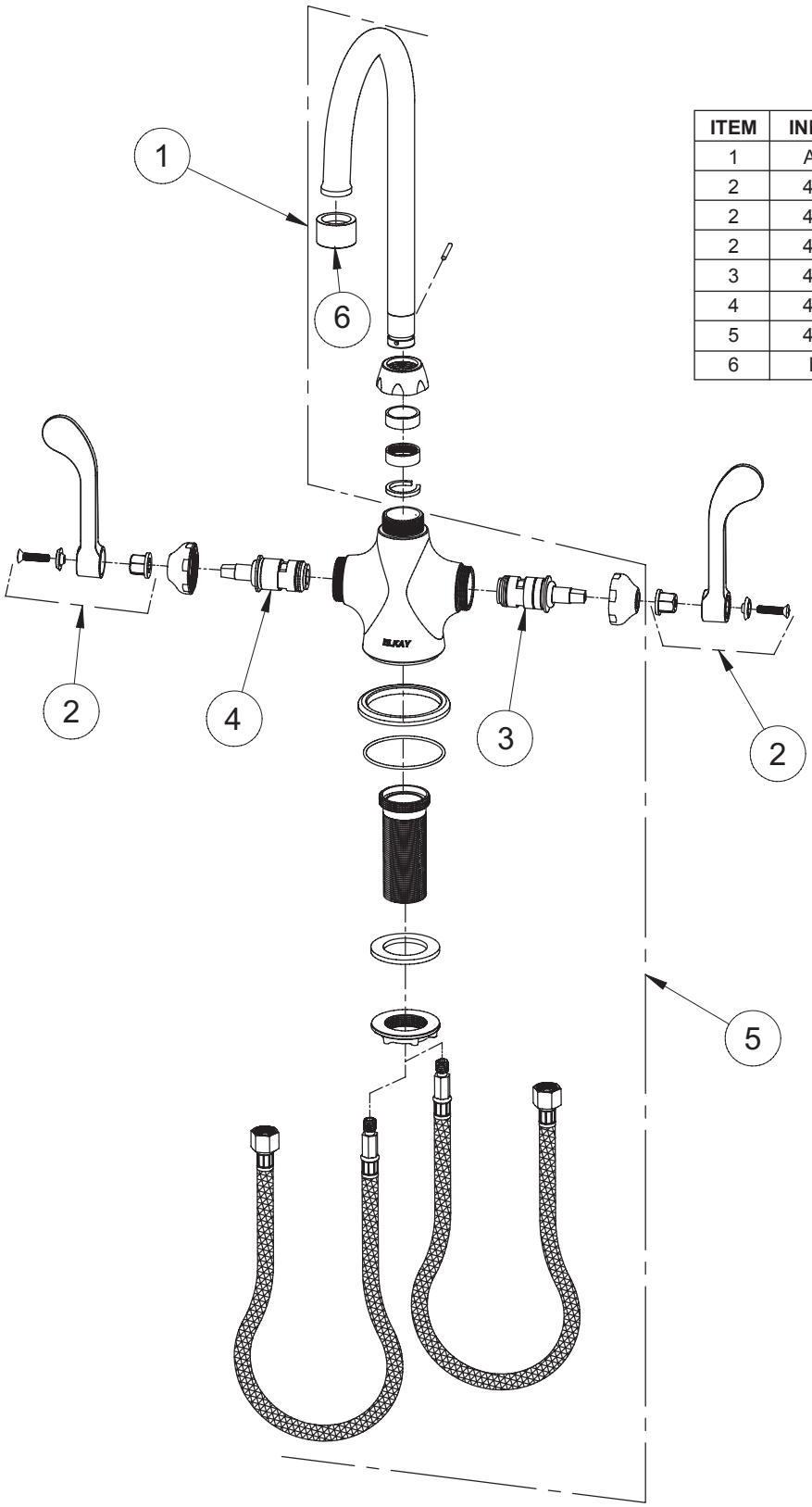

ITEM	IND. PART	DESCRIPTION
1	A55397	Spout
2	45918C	Handle, 2"
2	45919C	Handle, 4"
2	45920C	Handle, 6"
3	45923C	Right Cold Cartridge
4	45924C	Left Hot Cartridge
5	45915C	Body
6	LK734	2.2 GPM VR Aerator

Elkay
elkayusa.com

2222 Camden Court, Oak Brook, IL 60523
1-630-574-8484 Fax: 1-630-574-4509

©2011 Elkay