ELKAY®
SPECIFICATIONS

Elkay® Wall Mount Hands-free Activation ADA Cooler Non-filtered Refrigerated Stainless
Model EZO8S

PRODUCT SPECIFICATIONS

Elkay® Wall Mount Hands-free Activation ADA Cooler Non-filtered Refrigerated Stainless. Chilling Capacity of 8.0 GPH (gallons per hour) of 50° F drinking water, based on 80° F inlet water and 90° F ambient, per ASHRAE 18 testing. Features shall include Hands Free. Furnished with Flexi-Guard ® Safety Bubbler. Electronic Sensor Bubbler activation. Product shall be Wall Mount (On Wall), for Indoor applications, serving 1 station(s). Unit shall be certified to UL 399 and CAN/CSA C22.2 No. 120.

Special Features:	Hands Free
Finish:	Stainless Steel
Power:	115V/60Hz
Bubbler Style:	Flexi-Guard ® Safety Bubbler
Activation by:	Electronic Sensor Bubbler
Mounting Type:	Wall Mount (On Wall)
Chilling Capacity*:	8.0 GPH
Full Load Amps	5
Rated Watts:	370
Dimensions (L x W x H):	18-3/8" x 19" x 19-13/16"
Approx. Shipping Weight:	51 lbs.
Installation Location:	Indoor
No. of Stations Served:	1
*Based on 80° F inlet water & 90° F ambient air temp for 50° F chilled drinking water.	

COOLING SYSTEM

- Compressor: Hermetically-sealed, reciprocating type, single phase. Sealed-in lifetime lubrication.
- Condenser: Fan cooled, copper tube with aluminum fins. Fan motor is permanently lubricated.
- Cooling Unit: Combination tube-tank type. Continuous copper tubing with is fully insulated with EPS foam that meets UL requirements for self-extinguishing material.
- Refrigerant Control: Refrigerant R-134a is controlled by accurately calibrated capillary tube.
- Temperature Control: Easily accessible enclosed adjustable thermostat is factory preset. Requires no adjustment other than for altitude requirements.

Included with Product: **Water Cooler**
Ships in one box.

A Century of Tradition and Quality.
For more than 100 years, Elkay has been making innovative products and providing exceptional customer care. We take pride in offering plumbing products that make life easier, inspire change and leave the world a better place.

PRODUCT COMPLIANCE

ADA & ICC A117.1
ASME A112.19.3/CSA B45.4
CAN/CSA C22.2 No. 120
NSF/ANSI 61 (Q≤1) & 372 (lead free)
UL 399

Complies with ADA & ICC A117.1 accessibility requirements when installed according to the requirements outlined in these standards. Installation may require additional components and/or construction features to be fully compliant. Consult the local Authority Having Jurisdiction if necessary.

Installation Instructions (PDF) - 1000002686

5 Year Limited Warranty on the refrigeration system of the unit. Electrical components and water system are warranted for 12 months from date of installation. **Warranty pertains to drinking water applications only. Non-drinking water applications are not covered under warranty.**

Warranty (PDF)

PART:_____QTY: _____
PROJECT:_____
CONTACT:_____
DATE:_____
NOTES:_____
APPROVAL:_____

In keeping with our policy of continuing product improvement, reserves the right to change product specifications without notice. Please visit for the most current version of product specification sheets. This specification describes product with design, quality, and functional benefits to the user. When making a comparison of other producers' offerings, be certain these features are not overlooked.

Optional Accessories		
EWF172	Elkay Universal Filtration Kit (1500-Gallon) Spec Sheet (PDF)	
MLP100	In-wall Carrier for Single-station On-wall Bottle Fillers Coolers & Fountains Spec Sheet (PDF)	
LKAPREZL	Elkay Cane Apron for EZ Gray Spec Sheet (PDF)	
97446C	Bubbler Kit Vandal-Resistant Spec Sheet (PDF)	

In keeping with our policy of continuing product improvement, reserves the right to change product specifications without notice. Please visit for the most current version of product specification sheets. This specification describes product with design, quality, and functional benefits to the user. When making a comparison of other producers' offerings, be certain these features are not overlooked.

Open space rough-in design permits new installation or replacement of existing fountains and coolers with this Elkay cooler when rough-in is within the outline shown.

IMPORTANT! INSTALLER PLEASE NOTE:
This water cooler has been designed and built to provide water to the user which has not been altered by materials in the cooler waterways.

The grounding of electrical equipment such as telephone, computers, etc to water lines is a common procedure. This grounding may be in the building or occur away from the building. This grounding can cause electrical feedback into a water cooler creating an electrolysis which creates a metallic taste or causes an increase in the metal content of the water. This condition is avoidable by installing the cooler using the proper materials as shown below.

NOTICE
The water cooler must be connected to the water supply using a dielectric coupling. The cooler is furnished with a non-metallic strainer which meets this requirement. The drain trap which is provided by the installer should also be plastic to completely isolate the cooler from the building plumbing system.

OPERATION OF QUICK CONNECT FITTINGS

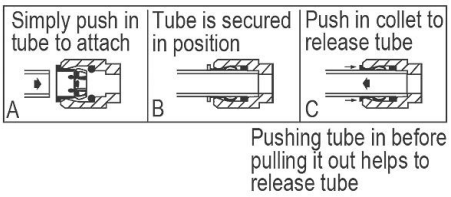

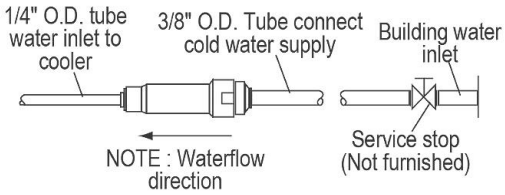

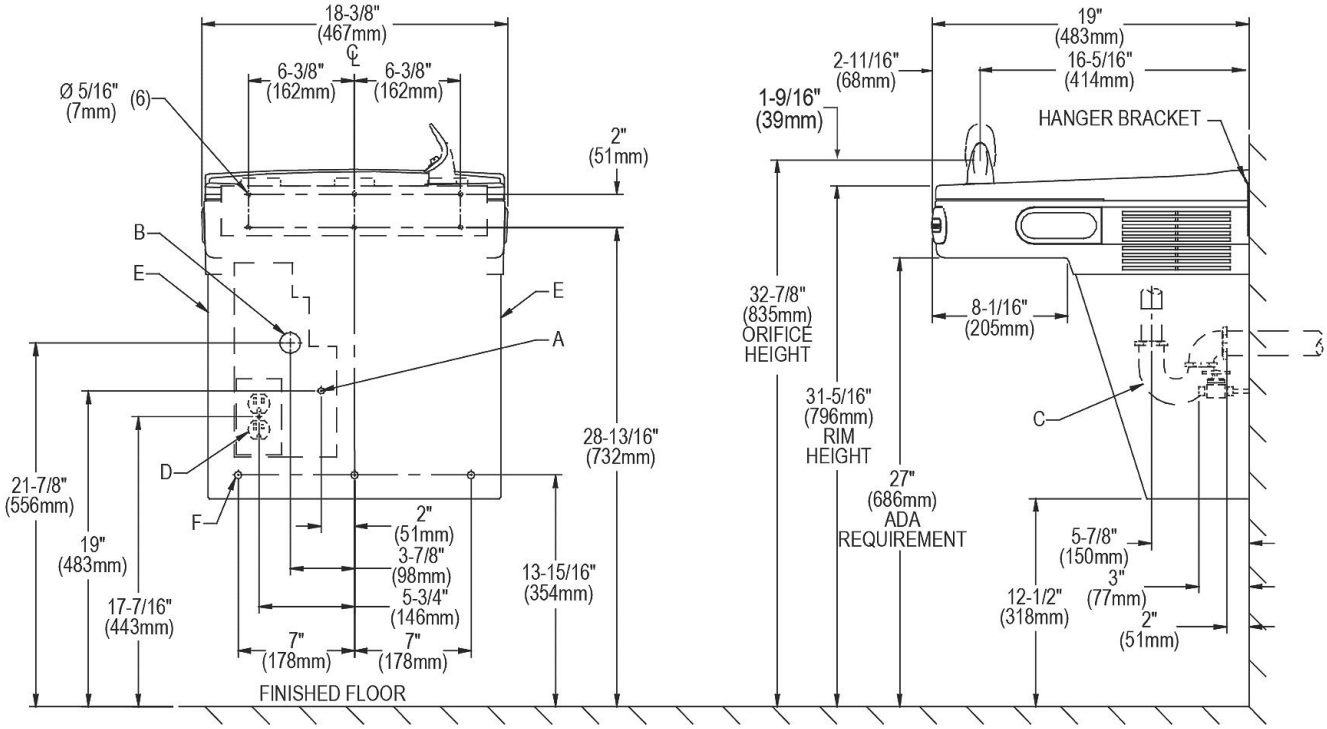

REDUCE HEIGHT BY 3 INCHES FOR INSTALLATION OF CHILDRENS ADA COOLER

LEGEND
A = Recommended water supply location. Shut off valve (not furnished) to accept 3/8" O.D. unplated copper tube connect. Up to 3" (76mm) maximum out from wall.
B = Recommended waste outlet location. To accomodate 1-1/4" nominal drain. Drain stub 2" (51mm) out form wall.
C = 1-1/4" Trap (not furnished).
D = Electrical Supply (3) wire recessed box duplex outlet.
E = Insure proper ventilation by maintaining 6" (152mm) (MIN.) clearance from cabinet louvers to wall.
F = 7/16" (11mm) Bolt holes for fastening to wall.
NOTE : New installations must use Ground Fault Circuit Interrupter (GFCI).

In keeping with our policy of continuing product improvement, reserves the right to change product specifications without notice. Please visit for the most current version of product specification sheets. This specification describes product with design, quality, and functional benefits to the user. When making a comparison of other producers' offerings, be certain these features are not overlooked.