ELKAY®
SPECIFICATIONS

Elkay Lustertone Classic Stainless Steel 14-1/2" x 14-1/2" x 5-1/2" Single Bowl Undermount ADA Sink w/Perfect Drain

Model(s) ELUHAD121255PD

PRODUCT SPECIFICATIONS

Elkay Lustertone Classic Stainless Steel, 14-1/2" x 14-1/2" x 5-1/2" Single Bowl Undermount ADA Sink w/Perfect Drain. Sink is manufactured from 18 gauge 304 Stainless Steel with a Lustrous Satin finish, Center drain placement, and Bottom only pads.

Installation Type:	Undermount
Material:	304 Stainless Steel
Special Features:	Perfect Drain
Finish:	Lustrous Satin
Gauge:	18
Sound Deadening:	Bottom only pads
Number of Bowls:	1
Sink Dimensions:	14-1/2" x 14-1/2" x 5-1/2"
Bowl 1 Dimensions:	12" x 12" x 5-3/8"
Drain Size:	3-1/2" (89mm)
Drain Location:	Center
Minimum Cabinet Size:	18"
Template Included:	Yes
Cutout Template #:	1000001423

Template is available for download at elkay.com. CAD software will be required to open the template.

Perfect Drain: Seamlessly welded stainless steel collar eliminates the gap between a traditional drain and the sink for a more sanitary and gap free installation. Select garbage disposers can be installed on either sink bowl for user convenience. Please see our Garbage Disposer Compatibility Guide.

Installation Profile:

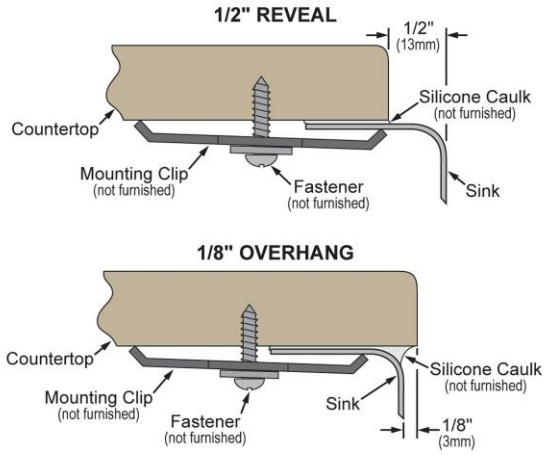

Designed to affix to the underside of any solid surface countertop.

Included with Product: **One LKPD1 Perfect Drain and strainer.**

A Century of Tradition and Quality.
For more than 100 years, Elkay has been making innovative products and providing exceptional customer care. We take pride in offering plumbing products that make life easier, inspire change and leave the world a better place.

Product Compliance: ADA & ICC A117.1
ASME A112.19.3/CSA B45.4
Accessory: ASME A112.18.2/CSA B125.2

Sinks are listed by IAPMO® as meeting the applicable requirements of the Uniform Plumbing Code®, International Plumbing Code®, and National Plumbing Code of Canada.

Complies with ADA & ICC A117.1 accessibility requirements when installed according to the requirements outlined in these standards.

Clean and Care Manual (PDF)
Installation Instructions (PDF) - 1000005239
Installation Instructions (PDF) - 74180289_Disposer
Installation Instructions (PDF) - 74180340-USA_Drain
Installation Instructions (PDF) - Garbage_Disposer_Compatibility_Guide
Warranty (PDF)

Similar models are available with: additional ADA depths

PART:_____QTY: _____
PROJECT:_____
CONTACT:_____
DATE:_____
NOTES:_____
APPROVAL:_____

In keeping with our policy of continuing product improvement, Elkay reserves the right to change product specifications without notice. Please visit elkay.com for the most current version of Elkay product specification sheets. This specification describes an Elkay product with design, quality, and functional benefits to the user. When making a comparison of other producers' offerings, be certain these features are not overlooked.

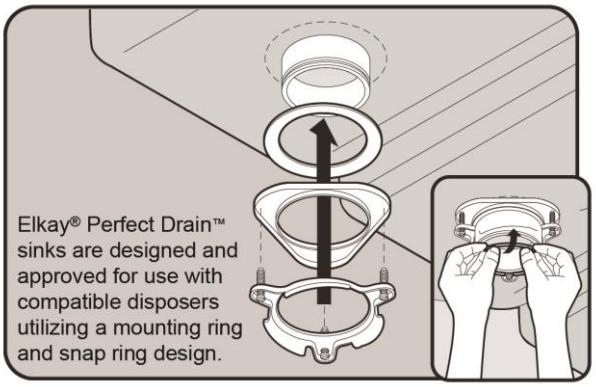

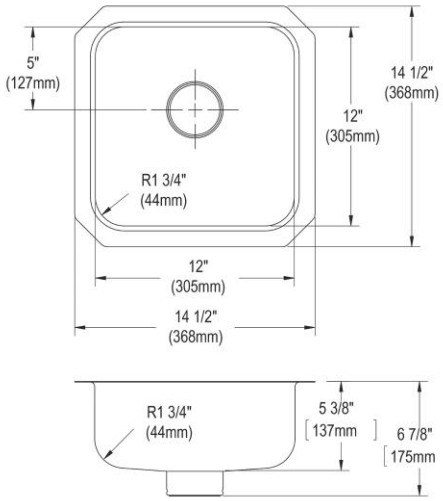

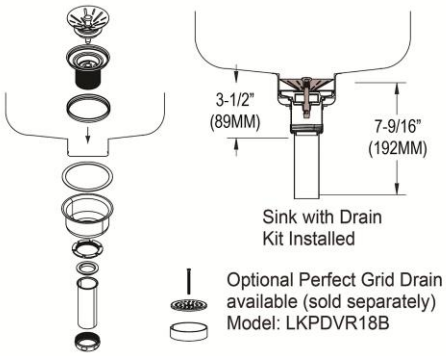

Included Accessories		
LKPD1	Elkay Perfect Drain Fitting Type 304 Stainless Steel Body and Strainer Spec Sheet (PDF)	

Optional Accessories		
CB912	Elkay Hardwood 12-7/8" x 10-1/8" x 1" Cutting Board Spec Sheet (PDF)	
LKDS99	Elkay 3-1/2" Garbage Disposal Stopper / Strainer for use with Perfect Drain-Chrome Polished Stainless Steel Spec Sheet (PDF)	
LKPDAD18B	Elkay Perfect Drain Chrome Plated Brass Body Strainer and LKADOS Tailpiece Spec Sheet (PDF)	

In keeping with our policy of continuing product improvement, Elkay reserves the right to change product specifications without notice. Please visit elkay.com for the most current version of Elkay product specification sheets. This specification describes an Elkay product with design, quality, and functional benefits to the user. When making a comparison of other producers' offerings, be certain these features are not overlooked.

LKPDVR18B	Elkay Perfect Drain Chrome Plated Brass Body Vandal-resistant Strainer Spec Sheet (PDF)	
LKGT1042	Elkay Gourmet Single Hole Bar Faucet Pull-out Spray and Lever Handle Spec Sheet (PDF)	NO IMAGE AVAILABLE
LKWRB1209SS	Elkay Stainless Steel 8" x 11" x 7" Rinsing Basket Spec Sheet (PDF)	
LKWUCSS	Elkay Stainless Steel 3-1/2" x 5-1/8" x 4-3/8" Utensil Caddy Spec Sheet (PDF)	

In keeping with our policy of continuing product improvement, Elkay reserves the right to change product specifications without notice. Please visit elkay.com for the most current version of Elkay product specification sheets. This specification describes an Elkay product with design, quality, and functional benefits to the user. When making a comparison of other producers' offerings, be certain these features are not overlooked.