ELKAY®
SPECIFICATIONS

Elkay SwirlFlo Bi-Level Fountain Non-Filtered Non-Refrigerated Freeze Resistant Stainless Steel
Model EDFPBM117FPRAK

PRODUCT SPECIFICATIONS

Elkay SwirlFlo® Bi-Level Fountain Non-Filtered Non-Refrigerated Freeze Resistant Stainless Steel. Features shall include Freeze Resistant. Furnished with Flexi-Guard ® Safety Bubbler. Mechanical Front Bubbler Button activation. Product shall be Wall Mount (On Wall), for Indoor + Outdoor applications, serving 2 station(s). Unit shall be lead-free design which is certified to NSF/ANSI 61 & 372 (lead free) and meets Federal and State low-lead requirements.

Special Features:	Freeze Resistant
Finish:	Stainless Steel
Power:	No Electrical Required
Bubbler Style:	Flexi-Guard ® Safety Bubbler
Activation by:	Mechanical Front Bubbler Button
Mounting Type:	Wall Mount (On Wall)
Chilling Capacity:	Non-refrigerated
Dimensions (L x W x H):	38-1/2" x 19" x 21-15/16"
Approx. Shipping Weight:	94 lbs.
Installation Location:	Indoor + Outdoor
No. of Stations Served:	2
**When used in non-temperature controlled environments, unit(s) must be adequately winterized and/or protected from extreme heat to prevent damage where climates dictate.	

- Mechanically-Activated bubbler continues to supply water in event of service disruptions.
- Freeze Resistant:
  - Depending on specific installation, freeze resistant system is located either below frost line or in temperature controlled space.

Included with Product: **Fountain with Back Plate, Freeze Resistant Box, Surface Mounting**

▼ Ships in multiple boxes.

A Century of Tradition and Quality.
For more than 100 years, Elkay has been making innovative products and providing exceptional customer care. We take pride in offering plumbing products that make life easier, inspire change and leave the world a better place.

PRODUCT COMPLIANCE

ADA & ICC A117.1

ASME A112.19.3/CSA B45.4

Buy American Act

NSF/ANSI 61 & 372 (lead free)

Installation Instructions (PDF) - 98010C
Installation Instructions (PDF) - 97566C
Installation Instructions (PDF) - 97696C

Water Systems are warranted for 12 months from date of installation. **Warranty pertains to drinking water applications only. Non-drinking water applications are not covered under warranty.**

Warranty (PDF)

PART:_____QTY: _____

PROJECT:_____

CONTACT:_____

DATE:_____

NOTES:_____

APPROVAL:_____

In keeping with our policy of continuing product improvement, Elkay reserves the right to change product specifications without notice. Please visit elkay.com for the most current version of Elkay product specification sheets. This specification describes an Elkay product with design, quality, and functional benefits to the user. When making a comparison of other producers' offerings, be certain these features are not overlooked.

Optional Accessories		
EWF172	Elkay Universal Filtration Kit (1500-Gallon) Spec Sheet (PDF)	
AP99	Elkay Access Panel 9" x 9" x 6" Spec Sheet (PDF)	
ACCESS12X38-5	Stainless Steel Access Panel for Bi-Level Architectural Fountains Spec Sheet (PDF)	

In keeping with our policy of continuing product improvement, Elkay reserves the right to change product specifications without notice. Please visit elkay.com for the most current version of Elkay product specification sheets. This specification describes an Elkay product with design, quality, and functional benefits to the user. When making a comparison of other producers' offerings, be certain these features are not overlooked.

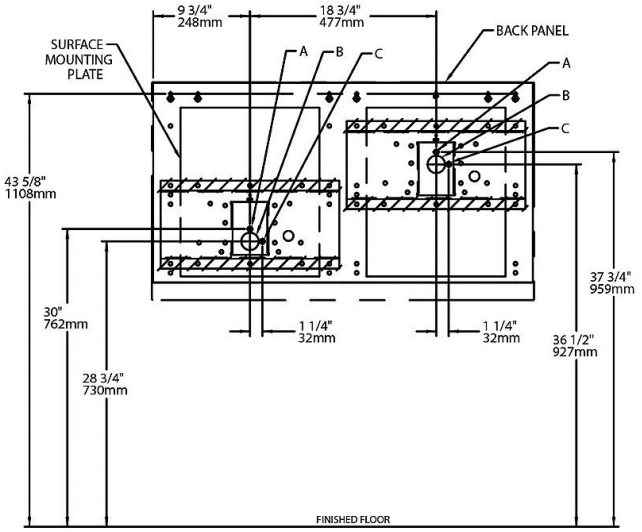

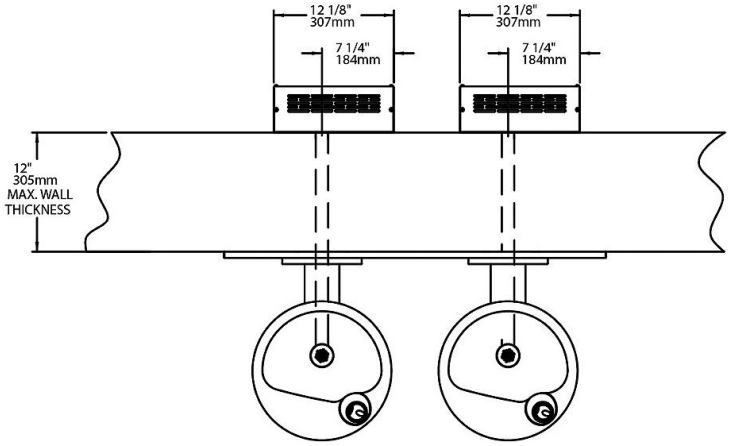

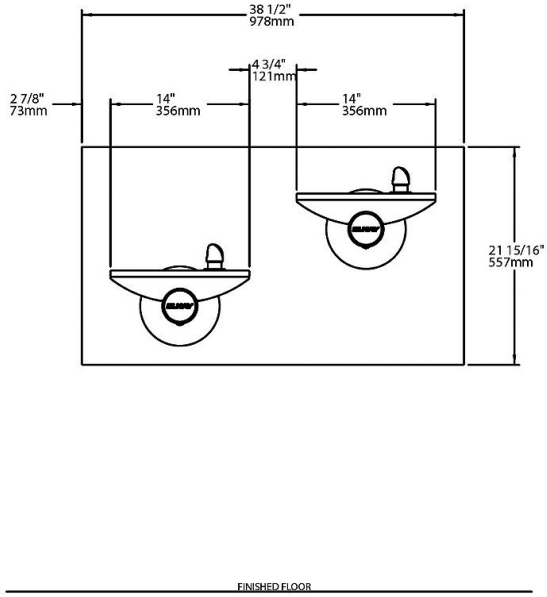

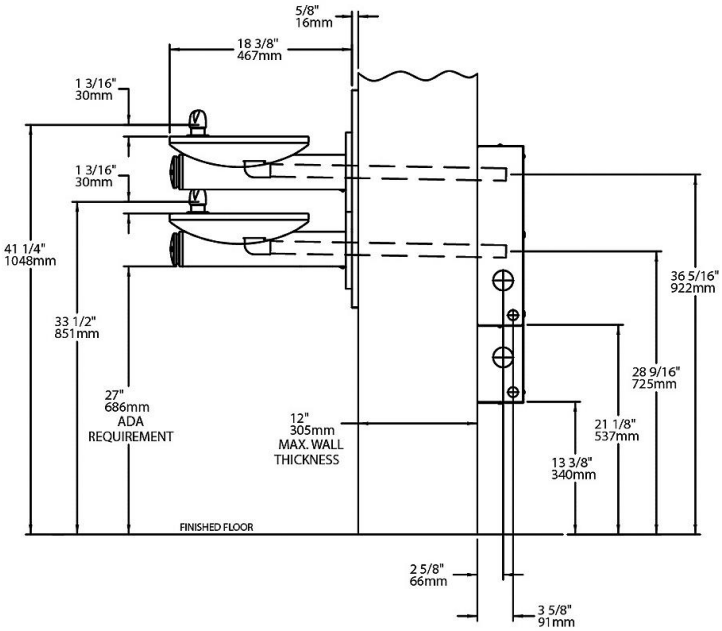

In keeping with our policy of continuing product improvement, Elkay reserves the right to change product specifications without notice. Please visit elkay.com for the most current version of Elkay product specification sheets. This specification describes an Elkay product with design, quality, and functional benefits to the user. When making a comparison of other producers' offerings, be certain these features are not overlooked.