DAYTON®
SPECIFICATIONS

Dayton® Stainless Steel 23-1/2" x 18-1/4" x 8" Single Bowl Undermount Sink
Model(s) DXUH2115

PRODUCT SPECIFICATIONS

Dayton® Stainless Steel 23-1/2" x 18-1/4" x 8" Single Bowl Undermount Sink. Sink is manufactured from 18 gauge 300 series Stainless Steel with a Radiant Satin finish, Center drain placement, and Bottom only pads.

Installation Type:	Undermount
Material:	300 series Stainless Steel
Finish:	Radiant Satin
Gauge:	18
Sound Deadening:	Bottom only pads
Number of Bowls:	1
Sink Dimensions:	23-1/2" x 18-1/4" x 8"
Bowl 1 Dimensions:	21" x 15-3/4" x 8"
Drain Size:	3-1/2" (89mm)
Drain Location:	Center
Minimum Cabinet Size:	27"
Mounting Hardware:	Undermount brackets sold separately
Template Included:	No
Cutout Template #:	1000000784

Template is available for download at elkay.com. CAD software will be required to open the template.

A Century of Tradition and Quality.
For more than 100 years, Elkay has been making innovative products and providing exceptional customer care. We take pride in offering plumbing products that make life easier, inspire change and leave the world a better place.

Product Compliance: ASME A112.19.3/CSA B45.4

Sinks are listed by IAPMO® as meeting the applicable requirements of the Uniform Plumbing Code®, International Plumbing Code®, and National Plumbing Code of Canada.

Clean and Care Manual (PDF)
Installation Instructions (PDF) - 1000005239
Warranty (PDF)

Installation Profile:

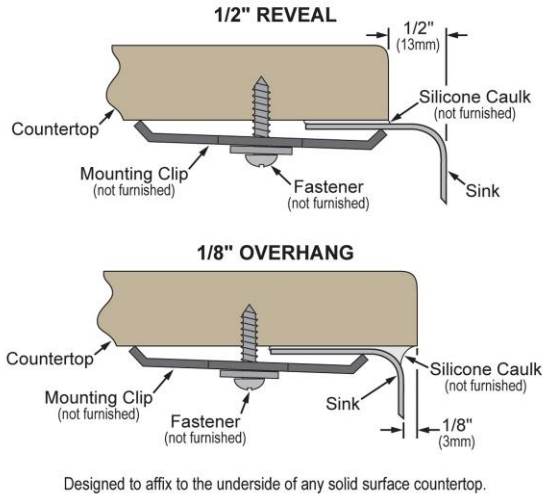

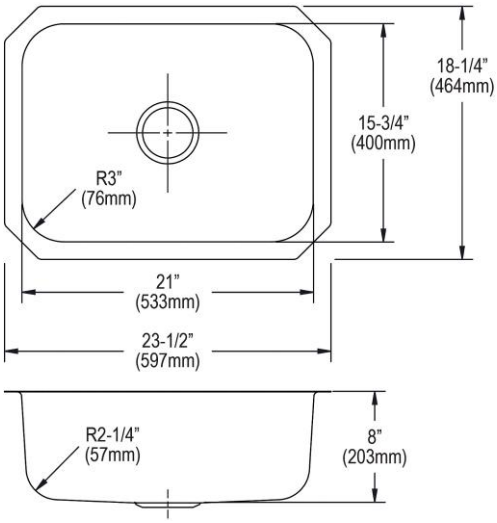

PART:_____QTY: _____

PROJECT:_____

CONTACT:_____

DATE:_____

NOTES:_____

APPROVAL:_____

In keeping with our policy of continuing product improvement, Elkay reserves the right to change product specifications without notice. Please visit elkay.com for the most current version of Elkay product specification sheets. This specification describes an Elkay product with design, quality, and functional benefits to the user. When making a comparison of other producers' offerings, be certain these features are not overlooked.

© 2024

Optional Accessories		
GBG2115SS	Dayton Stainless Steel 17-1/2" x 12-1/4" x 1" Bottom Grid Spec Sheet (PDF)	
CB1516	Elkay Hardwood 15" x 16-3/4" x 3/4" Cutting Board Spec Sheet (PDF)	
D1125	Dayton® 3-1/2" Stainless Steel Drain with Removable Basket Strainer and Rubber Stopper Spec Sheet (PDF)	

In keeping with our policy of continuing product improvement, Elkay reserves the right to change product specifications without notice. Please visit elkay.com for the most current version of Elkay product specification sheets. This specification describes an Elkay product with design, quality, and functional benefits to the user. When making a comparison of other producers' offerings, be certain these features are not overlooked.