ELKAY®
SPECIFICATIONS

Elkay Lustertone Classic Stainless Steel 34" x 17" x 7-5/8" Double Bowl Drop-in Classroom Sink
Model(s) DRKR23417L4

PRODUCT SPECIFICATIONS

Elkay Lustertone™ Classic Stainless Steel 34" x 17" x 7-5/8" Double Bowl Drop-in Classroom Sink. Sink is manufactured from 18 gauge 304 Stainless Steel with a Lustrous Satin finish, Center drain placement, and Bottom only pads.

Installation Type:	Drop-in
Material:	304 Stainless Steel
Finish:	Lustrous Satin
Gauge:	18
Sound Deadening:	Bottom only pads
Number of Bowls:	2
Sink Dimensions:	34" x 17" x 7-5/8"
Bowl 1 Dimensions:	9-1/4" x 12" x 3-1/2"
Bowl 2 Dimensions:	16" x 11-1/2" x 7-1/2"
Drain Size:	2" (51mm), 3-1/2" (89mm)
Drain Location:	Center
Minimum Cabinet Size:	39"
Mounting Hardware:	Part # 64090008 included for countertops up to 3/4" (19mm) thick
Template Included:	No

A Century of Tradition and Quality.
For more than 100 years, Elkay has been making innovative products and providing exceptional customer care. We take pride in offering plumbing products that make life easier, inspire change and leave the world a better place.

Product Compliance: ASME A112.19.3/CSA B45.4
Buy American Act

Sinks are listed by IAPMO® as meeting the applicable requirements of the Uniform Plumbing Code®, International Plumbing Code®, and National Plumbing Code of Canada.

Clean and Care Manual (PDF)
Installation Instructions (PDF) - 1000005236
Warranty (PDF)

Installation Profile:

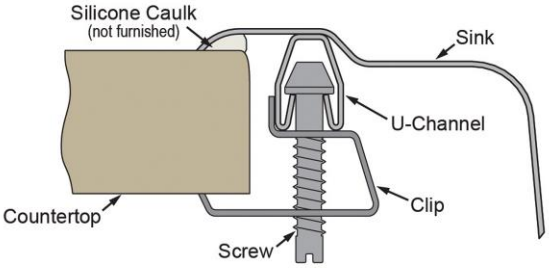

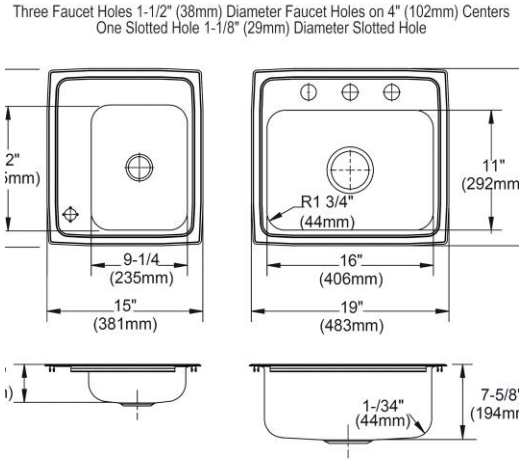

PART:_____QTY: _____

PROJECT:_____

CONTACT:_____

DATE:_____

NOTES:_____

APPROVAL:_____

In keeping with our policy of continuing product improvement, Elkay reserves the right to change product specifications without notice. Please visit elkay.com for the most current version of Elkay product specification sheets. This specification describes an Elkay product with design, quality, and functional benefits to the user. When making a comparison of other producers' offerings, be certain these features are not overlooked.

© 2023