ELKAY®
SPECIFICATIONS

Elkay Lustertone Classic Stainless Steel 31" x 19-1/2" x 6" Single Classroom ADA Sink w/Perfect Drain Grid
Model(s) DRKAD311960PD

PRODUCT SPECIFICATIONS

Elkay Lustertone™ Classic Stainless Steel 31" x 19-1/2" x 6", Single Classroom ADA Sink w/Perfect Drain Grid. Sink is manufactured from 18 gauge 304 Stainless Steel with a Lustrous Satin finish, Rear Center drain placement, and Bottom only pads.

Installation Type:	Drop-in
Material:	304 Stainless Steel
Special Features:	Perfect Drain
Finish:	Lustrous Satin
Gauge:	18
Sound Deadening:	Bottom only pads
Number of Bowls:	1
Sink Dimensions:	31" x 19-1/2" x 6"
Bowl 1 Dimensions:	22" x 16" x 5-7/8"
Drain Size:	3-3/8" (86mm)
Drain Location:	Rear Center
Minimum Cabinet Size:	36"
Mounting Hardware:	Part # 64090014 included for countertops up to 3/4" (19mm) thick
Cutout Template #:	1000001243

Template is available for download at elkay.com

Cutout Dimensions for Top Mount Installation:
30-3/8" x 18-7/8" (772mm x 479mm) with 1-1/2" (38mm) corner radius

Perfect Drain: Seamlessly welded stainless steel collar eliminates the gap between a traditional drain and the sink for a sanitary and gap free installation.
U.S. Patent Nos 9,057,185 and 9,783,968.

Hole Drilling Configurations:

1-1/2" (38mm) Diameter Faucet Holes on 4" (102mm) Centers
1-1/8" (29mm) Diameter Slotted Hole

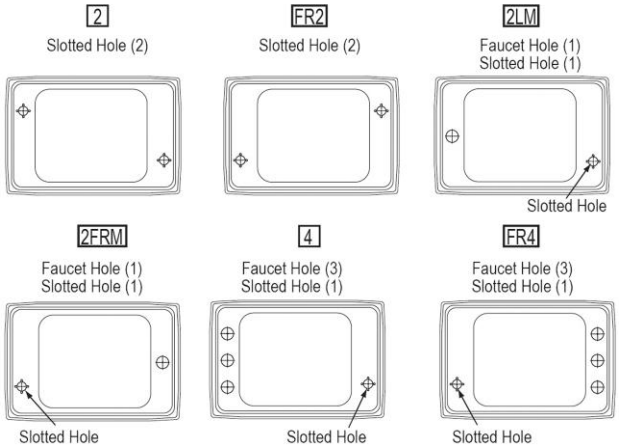

PART:_____QTY: _____

PROJECT:_____

CONTACT:_____

DATE:_____

NOTES:_____

APPROVAL:_____

Included with Product: **LKPDVR18B vandal-resistant Perfect Drain and grid assembly.**

AMERICAN PRIDE. A LIFETIME TRADITION.
Like your family, the Elkay family has values and traditions that endure. For almost a century, Elkay has been a family-owned and operated company, providing thousands of jobs that support our families and communities.

Product Compliance: ADA & ICC A117.1
ASME A112.19.3/CSA B45.4
Accessory: ASME A112.18.2/CSA B125.2

Sinks are listed by IAPMO® as meeting the applicable requirements of the Uniform Plumbing Code®, International Plumbing Code®, and National Plumbing Code of Canada.

Complies with ADA & ICC A117.1 accessibility requirements when installed according to the requirements outlined in these standards.

Clean and Care Manual (PDF)
Installation Instructions (PDF)
Limited Lifetime Warranty (PDF)

Similar models are available with: additional ADA depths

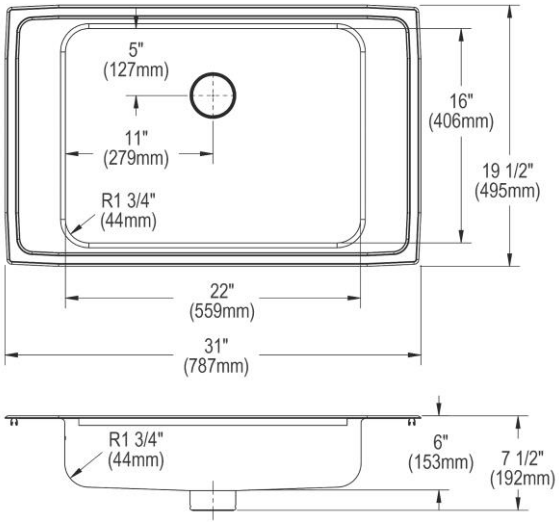

In keeping with our policy of continuing product improvement, Elkay reserves the right to change product specifications without notice. Please visit elkay.com for the most current version of Elkay product specification sheets. This specification describes an Elkay product with design, quality, and functional benefits to the user. When making a comparison of other producers' offerings, be certain these features are not overlooked.

Installation Profile:

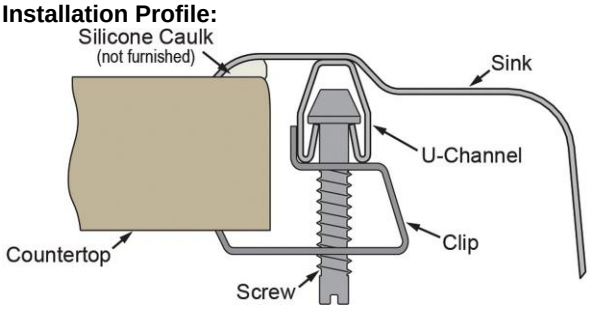

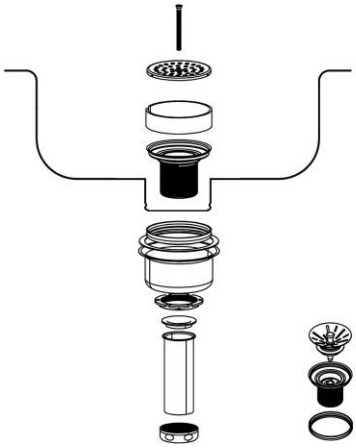

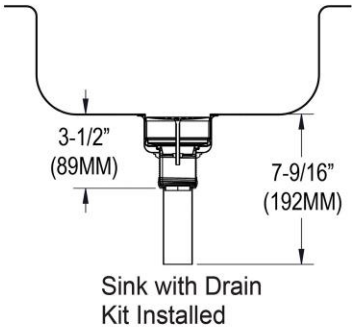

Optional standard perfect drain available (sold separately)
Model: LKPD1

OPTIONAL ACCESSORIES

Drain:	LKPDAD18B, LKPD1, LKDS35
Hardware:	LK364, LK463
Sinkmate:	LKSMHSL

In keeping with our policy of continuing product improvement, Elkay reserves the right to change product specifications without notice. Please visit elkay.com for the most current version of Elkay product specification sheets. This specification describes an Elkay product with design, quality, and functional benefits to the user. When making a comparison of other producers' offerings, be certain these features are not overlooked.