ELKAY®
SPECIFICATIONS

Elkay Celebrity Stainless Steel 33" x 22" x 7-1/4" Offset Double Bowl Top Mount Sink
Model(s) CR250

PRODUCT SPECIFICATIONS

Elkay Celebrity Stainless Steel 33" x 22" x 7-1/4", Offset Double Bowl Top Mount Sink. Sink is manufactured from 20 gauge 304 Stainless Steel with a Brushed Satin finish, Center drain placement, and Bottom only pads.

Installation Type:	Drop-in
Material:	304 Stainless Steel
Finish:	Brushed Satin
Gauge:	20
Sound Deadening:	Bottom only pads
Number of Bowls:	2
Sink Dimensions:	33" x 22" x 7-1/4"
Bowl 1 Dimensions:	13-1/2" x 18" x 6-7/8"
Bowl 2 Dimensions:	14" x 15-3/4" x 7"
Drain Size:	3-1/2" (89mm)
Drain Location:	Center
Minimum Cabinet Size:	36"
Mounting Hardware:	Part # 64090014 included for countertops up to 3/4" (19mm) thick
Template Included:	No
Cutout Template #:	1000001189

Template is available for download at elkay.com. CAD software will be required to open the template.

Cutout Dimensions for Drop-in Installation:
32-3/8" x 21-3/8" (822mm x 543mm) with 1-1/2" (38mm) corner radius

Hole Drilling Configurations:

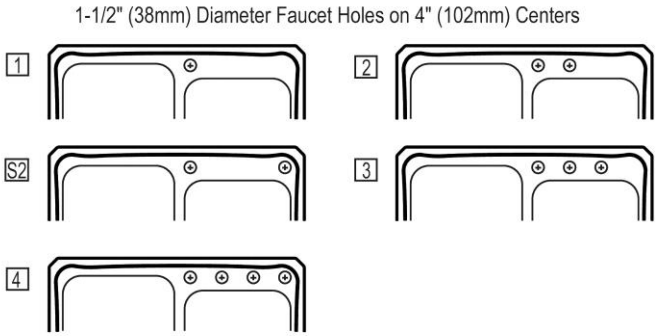

A Century of Tradition and Quality.
For more than 100 years, Elkay has been making innovative products and providing exceptional customer care. We take pride in offering plumbing products that make life easier, inspire change and leave the world a better place.

Product Compliance: ASME A112.19.3/CSA B45.4
Buy American Act

Sinks are listed by IAPMO® as meeting the applicable requirements of the Uniform Plumbing Code®, International Plumbing Code®, and National Plumbing Code of Canada.

Clean and Care Manual (PDF)
Installation Instructions (PDF) - 74180147
Limited Lifetime Warranty (PDF)

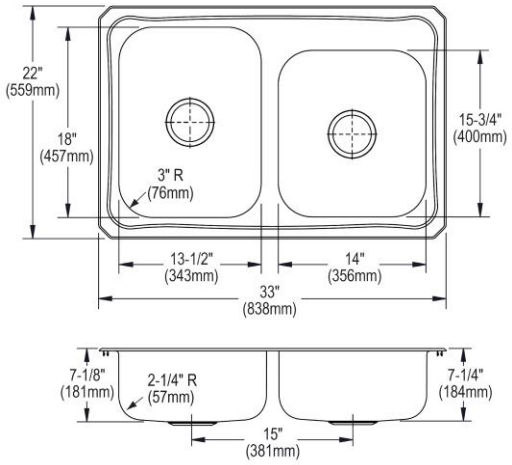

PART:_____QTY: _____
PROJECT:_____
CONTACT:_____
DATE:_____
NOTES:_____
APPROVAL:_____

In keeping with our policy of continuing product improvement, Elkay reserves the right to change product specifications without notice. Please visit elkay.com for the most current version of Elkay product specification sheets. This specification describes an Elkay product with design, quality, and functional benefits to the user. When making a comparison of other producers' offerings, be certain these features are not overlooked.

Elkay Celebrity Stainless Steel 33" x 22" x 7-1/4" Offset Double Bowl Top Mount Sink
Model(s) CR250

Installation Profile:

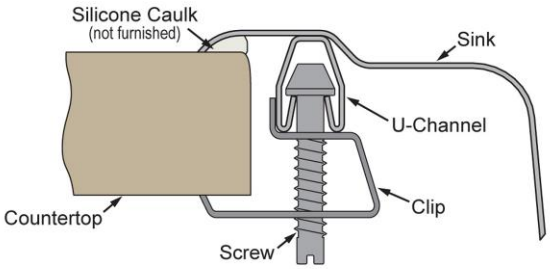

Optional Accessories		
LKWBG1415SS	Elkay Stainless Steel 12" x 13-1/2" x 1" Bottom Grid Spec Sheet (PDF)	
CB1516	Elkay Hardwood 15" x 16-3/4" x 3/4" Cutting Board Spec Sheet (PDF)	
LK99	Elkay Deluxe 3-1/2" Drain Type 304 Stainless Steel Body Strainer Basket Rubber Seal and Tailpiece Spec Sheet (PDF)	
LKGT1041	Elkay Gourmet Single Hole Kitchen Faucet Pull-out Spray and Lever Handle with Hi and Mid-rise Base Options Spec Sheet (PDF)	
LKGT2041	Elkay Gourmet Single Hole Kitchen Faucet with Pull-out Spray and Lever Handle Spec Sheet (PDF)	
LKWERBSS	Elkay Stainless Steel 15-3/8" x 12-3/8" x 5-7/16" Rinsing Basket Spec Sheet (PDF)	
LKWRB1318SS	Elkay Stainless Steel 12-1/2" x 17" x 7" Rinsing Basket Spec Sheet (PDF)	
LKSMHSL	Spec Sheet (PDF)	NO IMAGE AVAILABLE

In keeping with our policy of continuing product improvement, Elkay reserves the right to change product specifications without notice. Please visit elkay.com for the most current version of Elkay product specification sheets. This specification describes an Elkay product with design, quality, and functional benefits to the user. When making a comparison of other producers' offerings, be certain these features are not overlooked.