ELKAY®
SPECIFICATIONS

Undermount Single Bowl Lavatory Sink made with CuVerro® Antimicrobial Copper Model ELUH1511-CU

NEW ELUH Installation Options

ELUH models have been redesigned to accommodate 1/2" reveal and no reveal installation options.

GENERAL

Highest quality sink formed of #18 (1.2mm) gauge, CuVerro antimicrobial copper that combines beauty and performance. It represents the only class of solid surface material registered with the EPA for its inherent ability to kill infectious bacteria.* Undermount.

DESIGN FEATURES

Bowl Depth: 6" (152mm).

Finish: Exposed surfaces are hand blended to a Lustrous Highlighted Satin finish.

Underside: Underside of sink is fully protected by heavy duty Sound Guard® undercoating to reduce condensation and dampen sound.

OTHER

Drain Opening: 1-5/8" (41mm).
Overflow: Sink comes with LKF293-CU overflow assembly.
Note: All Elkay undermount sinks are designed to affix to the underside of any solid surface countertop.
Sink complies with IGC-194.

Sinks are listed by IAPMO® as meeting the applicable requirements of the Uniform Plumbing Code®, International Plumbing Code®, and National Plumbing Code of Canada.

These sinks are compliant to ADA and ANSI/ICC A117.1 accessibility requirements when installed according to the requirements outlined in these standards.

OPTIONAL ACCESSORIES

Drains: LK174-CU, LK174LO-CU
Mounting Clip: LKUCLIP8

*Testing demonstrates effective antibacterial activity against Methicillin-Resistant Staphylococcus aureus, Staphylococcus aureus, Enterobacter aerogenes, Pseudomonas aeruginosa, and E. Coli O157:H7.

Purchaser is aware and informed that the Elkay sink being purchased is made up of a copper-nickel alloy. Some literature reports that some persons may have allergic reactions when exposed to nickel-containing substances. Purchaser should insure that reasonable precautions are taken in this regard. Elkay and purchaser agree that should a claim or litigation arise wherein a person is seeking damages due to an alleged allergic reaction to these substances, that purchaser will indemnify, defend and hold harmless Elkay for any damages and the costs of litigation for any such claim.

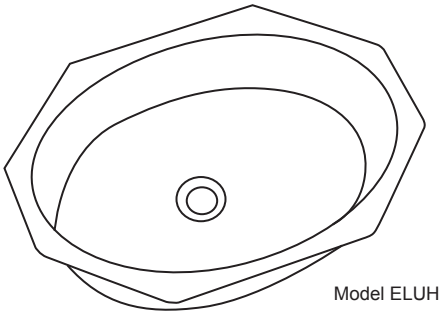

Model ELUH1511-CU

Sinks Are MADE IN USA™

Installation Profile

1/8" (3mm) Overhang

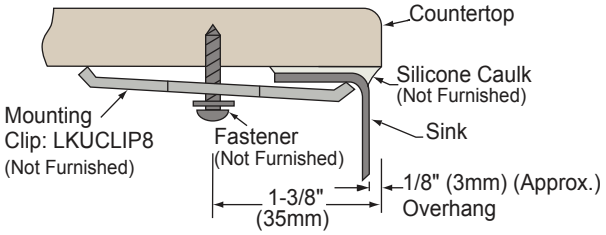

1/2" (13mm) Reveal

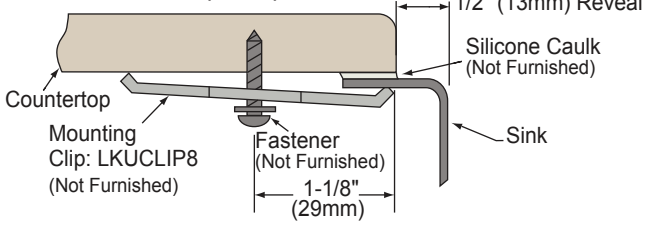

In keeping with our policy of continuing product improvement, Elkay reserves the right to change product specifications without notice. Please visit elkay.com for the most current version of Elkay product specification sheets.

This specification describes an Elkay product with design, quality, and functional benefits to the user. When making a comparison of other producers' offerings, be certain these features are not overlooked.

© 2014 Elkay

ELKAY®
SPECIFICATIONS

Undermount Single Bowl Lavatory Sink made with CuVerro® Antimicrobial Copper Model ELUH1511-CU

SINK DIMENSIONS*

Model Number	Overall		Inside Bowl			Cutout in Countertop	Minimum Cabinet Size
	L	W	L	W	D		
ELUH1511-CU	17 (432mm)	13 (330mm)	15 1/2 (394mm)	11 3/8 (289mm)	6 (152mm)	See Template**	21 (533mm)

*Length is left to right. Width is front to back.
**Template #1000001501 packed with every sink.

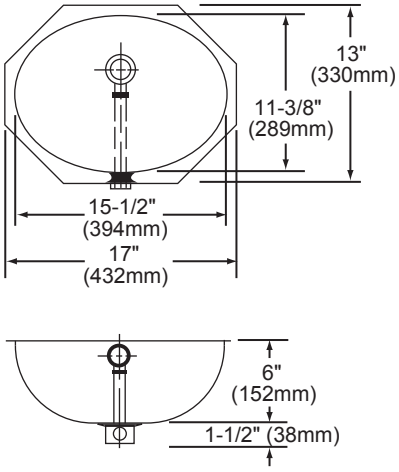

ELU1511-CU Illustrated

In keeping with our policy of continuing product improvement, Elkay reserves the right to change product specifications without notice. Please visit elkay.com for the most current version of Elkay product specification sheets.

This specification describes an Elkay product with design, quality, and functional benefits to the user. When making a comparison of other producers' offerings, be certain these features are not overlooked.

Elkay
elkay.com

2222 Camden Court
Oak Brook, IL 60523

© 2014 Elkay