Installation / Care / Use Manual

Original Instructions

Model: EZWSM82K, LZWSM82K

Description

Refrigerated bottle filling station delivers chilled, clean potable drinking water with sensor activated water flow. Recessed, in-wall mounting frame houses the remote chiller and provideds a means for mounting bottle filler.

Ratings

- Electrical: 230Vac, 50/60Hz, (See Nameplate for Amperage), 1 phase.
- Ambient Air Temperature: 50-100.4 °F (10-38 °C).
- Water Pressure: 20-100 psig (0.14-0.69 MPa).
- Maximum Water Temperature: 90 °F (32 °C).
- Ingress Protection: IP2x
- For Indoor Commercial Use only.
- Water Inlet: 3/8” (9.5mm) O.D. unplated copper tube.
- Waste Water Outlet: 1-1/4” (38.1mm) O.D. tube

Definitions

DANGER – Indicates death or serious injury will result if proper precautions are not taken.
WARNING – Indicates death, serious injury or property damage can result if proper precautions are not taken.
CAUTION – Indicates some injury or property damage may result if proper precautions are not taken.

Authorized Service Personnel – Factory trained personnel or personnel having working knowledge of electrical, plumbing, and machine (appliance) maintenance procedures.

Safety

DANGER

- Please read these instructions completely before starting the installation or performing any service. Failure to follow the instructions and safety precautions in this manual can result in serious injury or death.
- After installation, keep these instructions in a safe location for future reference.
- Electric supply must be identical in voltage, cycle, and phase to that specified on nameplate.
- Electrical supply must have Ground Fault Circuit Interrupter (GFCI) protection.
- A means for disconnecting electrical supply to the unit must be incorporated in the fixed wiring in accordance with wiring rules. This is to allow electrical disconnection of the unit from electrical supply after installation.

WARNING

- For use with clean, clear potable drinking water only. Do not use with water that is microbiologically unsafe or of unknown quality without adequate disinfection before the system.
- Installation and connection to water and electrical mains must be in compliance with local and national laws.
- All Installation and Service work must be performed by an authorized service personnel.

CAUTION

- This appliance can be used by children aged from 8 years and above and persons with reduced physical, sensory, or mental capabilities or lack of experience and knowledge if they have been given supervision or instructions concerning use of the appliance in a safe way and understand the hazards involved. Children shall not play with the appliance. Cleaning and user maintenance shall not be made by children without supervision.
- To prevent a metallic taste or increased metal content in the water due to an electrolysis process caused by electrical feedback from the grounding of electrical equipment to water supply and water waste mains, connect to these mains using non-conductive materials. The provided solenoid valve regulator assembly meets this requirement.

Installation

For correct and safe installation, please read these instructions completely.

DANGER

- All Installation work must be performed by an authorized service personnel.
- Disconnect electrical supply serving the Installation area to reduce risk of electrocution.
- Unit not suitable for installations where water jets could be used.

WARNING

- Shut off water supply serving the Installation area to reduce risk of water damage.
- Ensure proper ventilation by maintaining clearance from cabinet louvers to wall on each side of Cooler as specified in installation instructions.
- Never wire compressor directly to electrical supply.
- Thoroughly flush all water lines and fittings of all foreign matter before connecting to Cooler.
- Warranty is void if Installation is not made in accordance with current Manufacturing instructions.

CAUTION

- Hose-sets are not to be used for connecting to water mains.
- If inlet pressure is above 100 psig (0.69 MPa), a pressure regulator must be installed in water supply line. Any damage caused by reason of connecting this product to water supply line pressure outside it's rated pressure, is not covered by warranty.
- Tools/Items required but not provided.
  - Water Shut-off Valve with 3/8" (9.5mm) compression outlet.
  - Waste Trap (non-metallic)
  - Safety Glasses
  - Protective Gloves
  - 5/16" (8mm) Hex Socket or Flathead Screwdriver
  - 3/32" (2.4mm) Hex Key
  - Fasteners for wall type

Installation: MFWS100 Mounting Frame and ECH82 Chiller

1. Cut a square rectangular wall opening 18-3/4" (476mm) wide and 40" (1016mm) tall, 4-1/2" (114mm) above the floor line. See Figure 6.
2. Reinforce the wall opening on all sides so that it will adequately support the bottle filling station. This reinforcement must support up to 150 lbs (68kg) static load and provide a means for securing the frame assembly in place.
   - **NOTE:** Building construction must allow for adequate air flow on both sides and top of remote chiller unit. Minimum of 4" (102mm) is required.
3. Install plumbing and electrical rough-ins. A junction box for a three (3) wire, 10 amp branch circuit is provided on the inside of the chiller. See Figure 6.
4. Remove frame and related hardware from packaging. Install the frame squarely in wall opening with frame upright edges flush with the finished wall face. Place shelf inside frame and line up the two (2) holes on each. Insert loose ends of rods into holes on sides of shelf panel. Using appropriately sized screws or bolts (not provided), fasten the shelf and frame to bottom of wall opening. Secure the frame sides and top to the wall using ten (10) 5/16" (7.9mm) bolts or screws (not provided).
   - **NOTE:** Be sure that frame is squared in location. Do not use less than the required screw quantity and size.
5. Place chiller on shelf and install chiller according to provided chiller instructions.

Installation: EWF3000 Filter

- For filtered units only. See provided filter instructions for more information. For non-filtered units, skip to "Bottle Filler Mounting".
- See Figure 9 for the operation of Quick Connect Fittings.
- Ensure that electrical supply to chiller is disconnected.

1. Insert 3/8" (9.5mm) copper tube (provided) into the inlet side of filter head. Screw lock-nut hand tight to seal. See Figure 4.
2. Insert 1/4" (6.4mm) polytube (provided) into outlet of filter head.
3. Mount filter head to the side of the remote chiller using the filter mounting bracket and screws (provided). See Figure 3 for filter mounting location.
4. Make connections between filter head and remote chiller. Discard in-line strainer, and connect 1/4" (6.4mm) polytube to 1/4" (6.4mm) chiller water inlet using the 1/4" (6.4mm) x 1/4" (6.4mm) union (provided).
5. Install filter cartridge into filter head by inserting cartridge into filter head and turning clockwise as viewed from below filter.

Installation: Bottle Filler Mounting

1. Mount the upper panel and lower panel (see Figure 3) to the mounting frame, aligning holes in the hinge brackets with holes in the mounting frame (three places each). Mount with adequately sized screws (not provided). Close the door and verify that the lock brackets on the side and bottom of the panel align with the slots on the mounting frame. Also verify that the panel is hanging high enough that it covers the top and bottom of the mounting frame. If adjustments need to be made, open the door and loosen the three screws on the hinge and adjust accordingly and then retighten screws.

Installation: Water Line Connection

1. Make water supply connections.
   - **For Non-Filtered Units:** Install a water shut-off valve and 3/8" (9.5mm) union connection to building water supply (valve and union not provided). Turn on water supply and flush the line thoroughly. Install in-line strainer between water shut-off valve and chiller water inlet. See Figure 2.
   - **For Filtered Units:** Install a water shut-off valve and 3/8" (9.5mm) union connection to building water supply (valve and union not provided). Turn on water supply and flush the line thoroughly. Connect building water supply to filter water inlet with the 3/8" (9.5mm) union. See Figure 1.
2. Make connection between bottle filler and chiller water outlet. Install a 1/4" (6.4mm) x 1/4" (6.4mm) union (provided) on chiller water outlet. Connect the water line from the bottle filler by inserting the 1/4" (6.4mm) O.D. polytube into the union on chiller water outlet.
3. Close the upper door and attach the drain fittings to drain tube. Re-attach elbow to p-trap and cut waste tube to required length using plumbing hardware and trap as a guide.

Installation: Waterline and Electrical Connection (continued)

4. Lock the upper door in place by tightening two (2) set screws (provided) with a 3/32" (2.4mm) hex key located on the right side of the panel. Tighten the bolt on the front of the panel to the frame using a 5/16" (8mm) Hex Socket.
5. Turn on building water supply and open water shut-off valve. Check all connections for leaks and correct any found.
6. Connect modular (C-13) end of International Power Cord Set (sold separetly) into power inlet on bottle filler (see Figure 3) and ensure plug end reaches electrical outlet. DO NOT PLUG INTO ELECTRICAL OUTLET.
7. For electrical connection to the remote chiller, see instructions provided with the remote chiller.

Operation: Start-Up

1. Turn water supply on and inspect for leaks. Fix all leaks before continuing.
2. Connect plug end of International Power Cord Set (sold separately) into electrical outlet and turn on power supply to remote chiller.

WARNING: Exposed electrially energized components. Use extreme caution.

3. Verify that power has been applied to bottle filler.
   - **For Non-Filtered Units:** LCD bottle counter should illuminate.
   - **For Filtered Units:** LCD bottle counter should illuminate and the green LED light should illuminate, showing "good" filter status.
4. Verify proper dispensing by placing cup, hand, or any opaque object in front of sensor area to activate bottle filler. Note: the first inital dispenses might have air in line which may cause a sputter. This will be eliminated once all air is purged from the line. A steady stream of water assures all air is removed. The sensor has a 30 second maximum **ON** time. It may be necessary to step away from beam a few times to allow chiller take to refill.
5. Recheck all water and drain connections with water flowing through system.
6. Lock the lower door in place by tightening two (2) set screws (provided) with a 3/32" (2.4mm) hex key located on the right side of the panel.

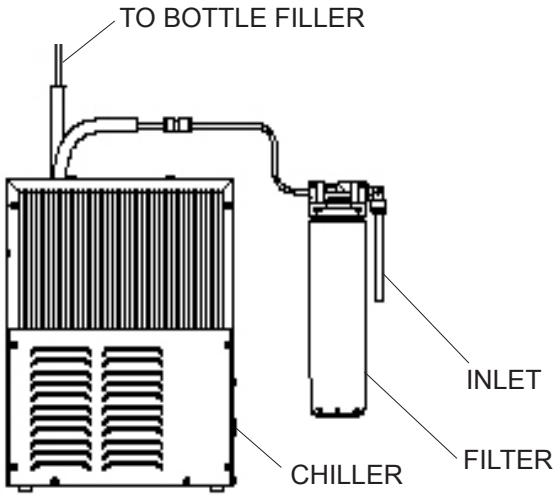

Figure 1

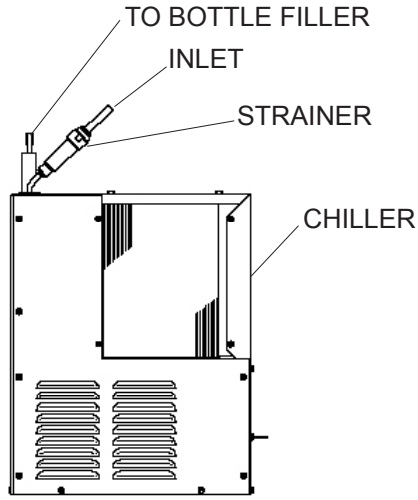

Figure 2

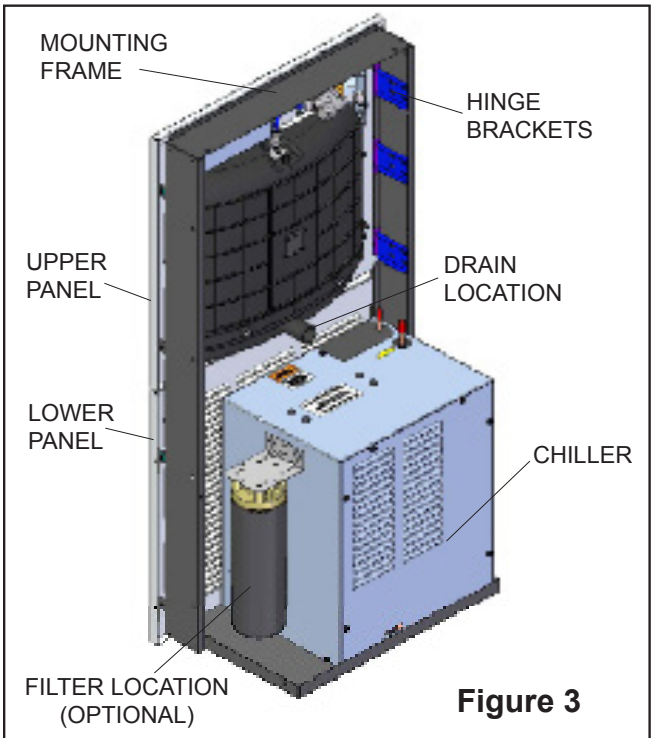

Figure 3

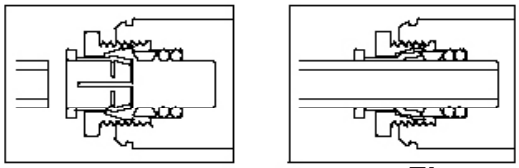

Note: Screw the locknut hand tight to seal.

Figure 4

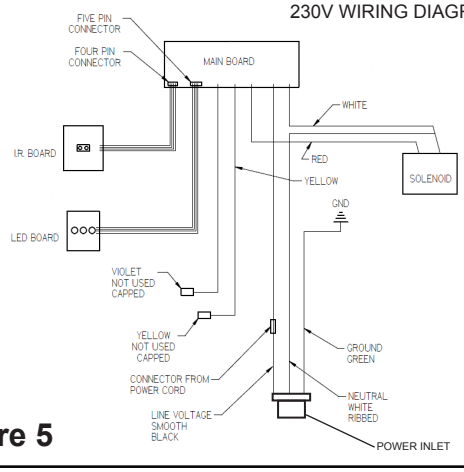

Figure 5

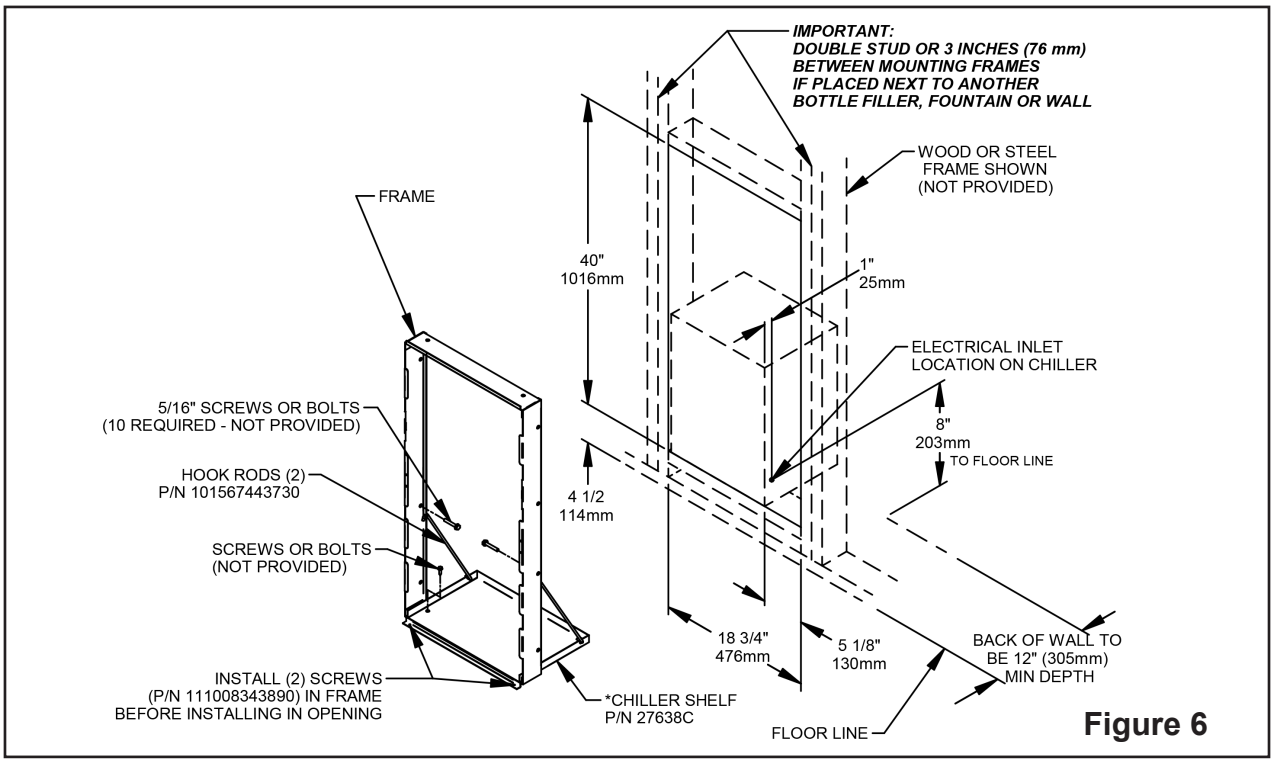

Figure 6

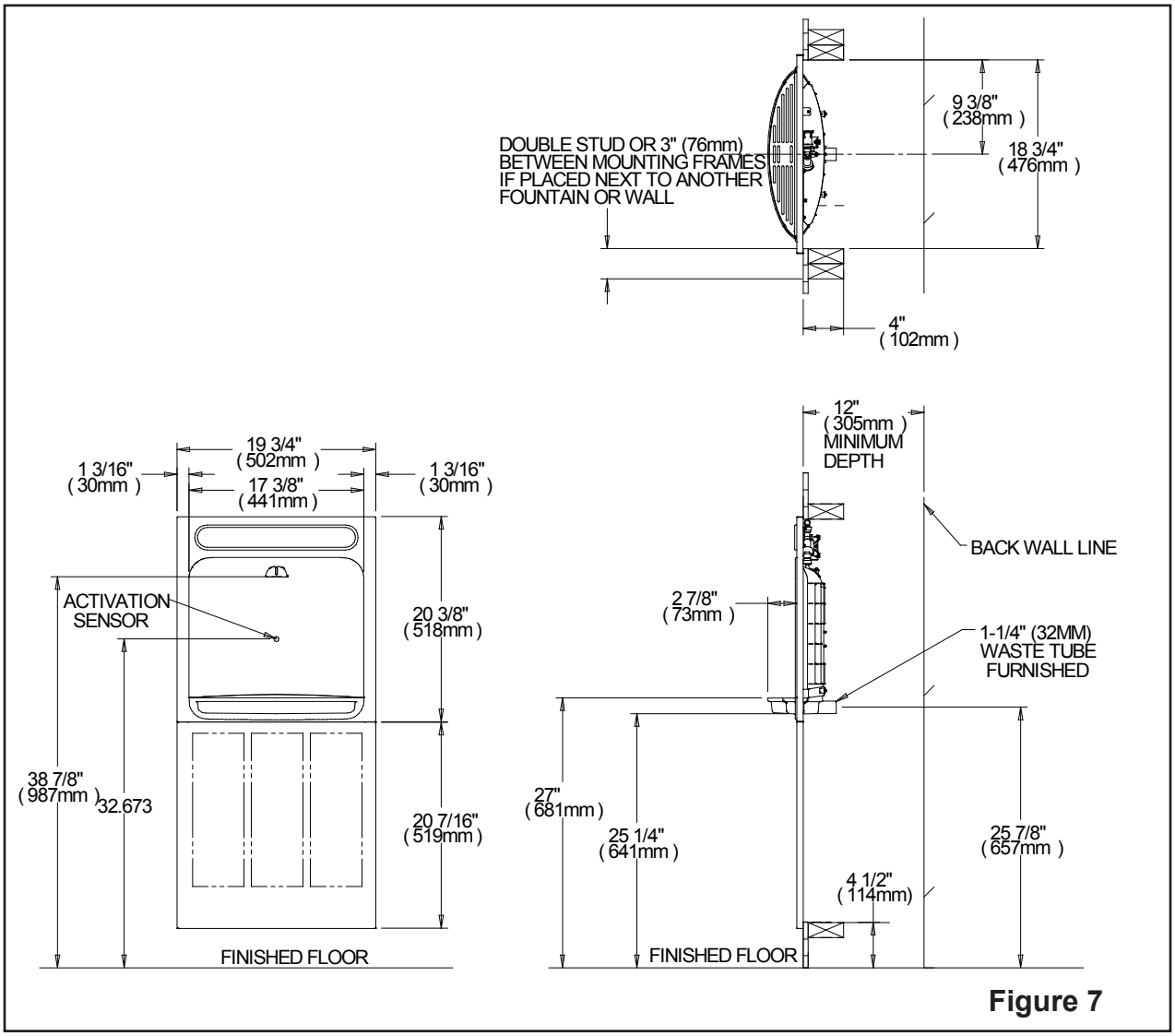

Figure 7

Service

For proper and safe servicing, please read these instructions completely.

DANGER

- All Service and Maintenance must be performed by an authorized service personnel.
- Disconnect electrical supply to the unit before any service work to reduce risk of electrocution.
- Shut off water supply serving the unit before any service work to reduce risk of water damage.

CAUTION

- Tools/Items required but not provided, for Servicing:
  - Safety Glasses
  - Protective gloves
  - 5/16” (8mm) Hex Socket or Flathead Screwdriver
  - 3/32” (2.4mm) Hex Key

Service: Inspection/Cleaning

- Inspect Cooler twice each year for proper operation and performance.
- Inspection of the unit will require disconnecting electrical supply, removal of panels, etc. and reassembly and return to service practices.

1. Cleaning: Warm, soapy water or mild household cleaning products can be used to clean the exterior panels. Extra caution should be used to clean the mirror finished stainless steel panels. They can be easily scratched and should only be cleaned with mild soap and water or Windex glass cleaner and a clean, soft cloth. Use of harsh chemicals or petroleum based or abrasive cleaners will void the warranty.
2. Ventilation: Cabinet louvers and condenser fins should be periodically cleaned with a brush, air hose or vacuum cleaner. Cleaning should be done twice each year or more frequently if needed due to environment. Excess dirt or poor ventilation can cause no cold water and compressor cycling on the compressor overload protector.
3. Water Flow: Confirm proper water flow. If water flow is slow, inspect filter or inline strainer for restriction. Replace filter cartridge if required. Disassemble inline strainer and clean if required.
4. Actuation of Quick Connect Water Fittings: Cooler is provided with lead-free connectors which utilize o-ring water seal. To remove tubing from the fitting, relieve water pressure, push in on the gray collar before pulling on the tubing. To insert tubing, push tube straight into fitting until it reaches a positive stop, approximately 3/4” (19mm). See Figure 9.

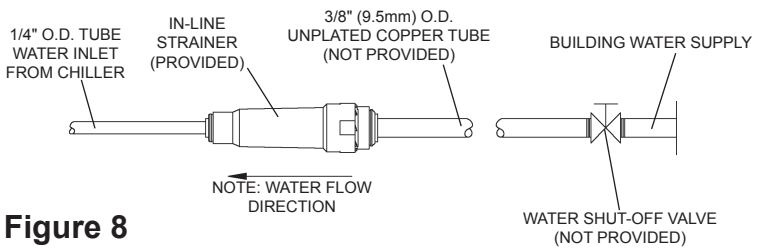

Figure 8

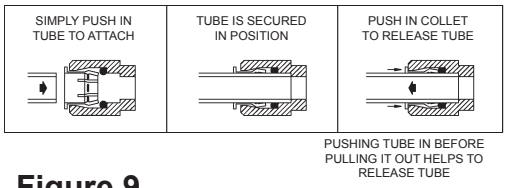

Figure 9

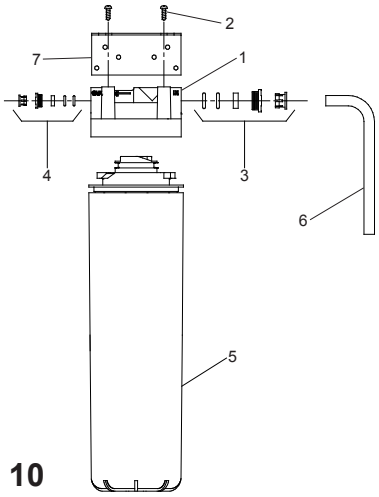

Figure 10

WATERSENTRY® FILTER PARTS LIST		
ITEM NO.	PART NO.	DESCRIPTION
1	51294C	Filter Head Assy
2	70792C	Screw #8-18 x .75 PH
3	70823C	Fitting - Superseal 3/8” (9.5mm)
4	70822C	Fitting - Superseal 1/4” (6.4mm)
5	51300C	Filter Assy
6	0000000885	Tube - Cu 3/8” Water Inlet
7	22490C	Bracket

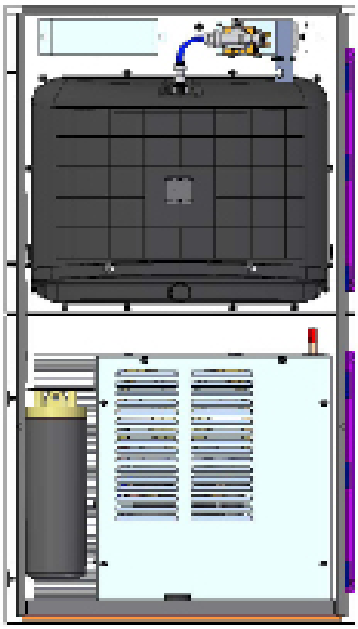

Figure 11

Figure 12

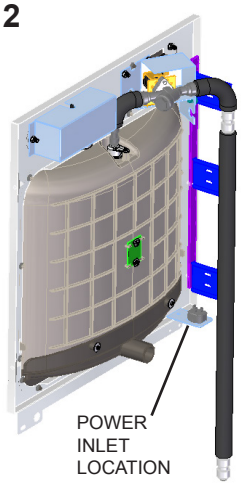

REPLACEMENT PARTS LIST	
PART NO.	DESCRIPTION
98544C	Kit - EE Sensor
98545C	Kit - Solenoid Valve Replacement
98546C	Kit - Aerator Replacement
98549C	Kit - Hardware & Waterway Parts
98631C	Kit - Electrical Package 220V
98632C	Kit - Solenoid Valve Replacement 220V

BF6, BF7, and BF8 Programs: Setting the Control Board

Verify Control Board Software

1. To verify the software program of the control board the unit will need to be shut down and restarted. The chiller (if present) does not need to be shut down and restarted.
2. The units lower panel must be open to access the power cord and wall outlet.
3. Shut down the unit by unplugging the power cord from the wall outlet.
4. Restart the unit by plugging the power cord back into the wall outlet.
5. Upon start up the bottle count display will show the software designation of BF6, BF7, BF8, BF9 or BF11.
6. Reference the BF6-BF7-BF8-BF9 or BF11 instructions for setting the control board.

Accessing the Programming Button

1. To access the program button the lower panel of the unit must be must be opened. The programming button is located at the bottom right corner of the upper panel. This area of the unit is concealed by the lower panel.

Reset the Filter Monitor

1. Instructions apply to filtered units only.
2. Depress the program button for approximately 2 seconds until the display changes then release. The display will change and scroll through three messages:
   - **RST FLTR** – Reset Filter Status LED
   - **RST BCNT** – Reset Bottle Count
   - **RNG SET** – Range Set for IR Sensor

   If the program button is not pushed again the display will scroll through the three messages above for three cycles and then default back to bottle count and be back in run mode.
3. When the display changes to "**RST FLTR**", depress the button again. The display will change to show "FLT=". Depress the button again and the display will show "FLTR=0".
4. The green LED should now be illuminated indicating that the visual filter monitor has been reset.

Setting the Range of the IR Sensor

1. Depress the program button for approximately 2 seconds until the display changes then release. The display will change and scroll through three messages:
   - **RST FLTR** – Reset Filter Status LED
   - **RST BCNT** – Reset Bottle Count
   - **RNG SET"** – Range Set for IR Sensor

   If the program button is not pushed again the display will scroll through the two messages above for three cycles and then default back to bottle count and be back in run mode.
2. When display shows "**RNG SET**" push program button once the display will show current value (can be 1 – 10) e.g. **"RNG = 3"**.
3. Once display shows current value push the program button to scroll through value of 1 – 10. Select the desired range setting.
4. Once range is selected allow approximately 4 seconds to pass and then the display will go back to bottle counter and be in run mode.
5. Test bottle filler by placing bottle or hand in front of sensor to make sure water is dispensed.

Resetting the Bottle Count

1. Depress the program button for approximately 2 seconds until the display changes then release. The display will change and scroll through three messages:
   - **RST FLTR** – Reset Filter Status LED
   - **RST BCNT** – Reset Bottle Count
   - **RNG SET"** – Range Set for IR Sensor

   If the program button is not pushed again the display will scroll through the two messages above for three cycles and then default back to bottle count and be back in run mode.
2. When the display changes to "**RST BCNT**", depress the button again. The display will change to show current bottle count value e.g. "00033183".
3. Depress the button again and the display will change to "**BTLCT=0**" for approximately 2 seconds and then return to run mode displaying 00000000.
4. You can test the bottle counter by running water approximately 5 seconds to see bottle counter advance 1.

BF9 Program: Setting the Control Board

Verify Control Board Software

1. To verify the software program of the control board the unit will need to be shut down and restarted. The chiller (if present) does not need to be shut down and restarted.
2. The units lower panel must be open to access the power cord and wall outlet.
3. Shut down the unit by unplugging the power cord from the wall outlet.
4. Restart the unit by plugging the power cord back into the wall outlet.
5. Upon start up the bottle count display will show the software designation of BF6, BF7, BF8, BF9 or BF11.
6. Reference the BF6-BF7-BF8-BF9 or BF11 instructions for setting the control board.

Accessing the Programming Button

1. To access the program button the lower panel of the unit must be must be opened. The programming button is located at the bottom right corner of the upper panel. This area of the unit is concealed by the lower panel.

(continues on next page)

BF9 Program: Setting the Control Board (continued)

Reset the Filter Monitor

1. Instructions apply to filtered units only.
2. Depress the program button for approximately 2 seconds until the display changes then release. The display will change and scroll through two messages:
   - **RST FLTR** – Reset Filter Monitor
   - **SETTINGS** – System Settings Sub Menu

   If the program button is not pushed again the display will scroll through the two messages above for three cycles and then default back to bottle count and be back in run mode.
3. When the display changes to “RST FLTR”, depress the button again. The display will change to show “**FLTR =**”. Depress the button again and the display will show “FLTR =0”
4. The Green LED should be illuminated indicating that the visual filter monitor has been reset.

Setting the Range of the IR Sensor

1. Depress the program button for approximately 2 seconds until the display changes then release. The display will change and scroll through three messages:
   - **RST FLTR** – Reset Filter Status LED
   - **RST BCNT** – Reset Bottle Count
   - **RNG SET** – Range Set for IR Sensor

   If the program button is not pushed again the display will scroll through the two messages above for three cycles and then default back to bottle count and be back in run mode.
2. When the display changes to “SETTINGS”, depress the button again. The display will change to show: “
   - **RNG SET**- Range set for IR sensor.
   - **UNIT TYP** - Type of unit (REFRIG or NON-RFRG)
   - **RST BCNT** - Reset bottle count
3. When display shows “**RNG SET**” push program button once the display will show current value (can be 1 – 10) e.g. “RNG = 3”.
4. Once display shows current value push the program button to scroll through value of 1 – 10. Select the desired range setting.
5. Once range is selected allow approximately 4 seconds to pass and then the display will go back to bottle counter and be in run mode.
6. Test bottle filler by placing bottle or hand in front of sensor to make sure water is dispensed.

Setting the Unit Type

1. Depress the program button for approximately 2 seconds until the display changes then release. The display will change and scroll through three messages:
   - **RST FLTR** – Reset Filter Status LED
   - **RST BCNT** – Reset Bottle Count
   - **RNG SET** – Range Set for IR Sensor

   If the program button is not pushed again the display will scroll through the two messages above for three cycles and then default back to bottle count and be back in run mode.
2. When the display changes to “SETTINGS”, depress the button again. The display will change to show: “
   - **RNG SET**- Range set for IR sensor.
   - **UNIT TYP** - Type of unit (REFRIG or NON-RFRG)
   - **RST BCNT** - Reset bottle count
3. When display shows “**UNIT TYPE**” push program button once the display will show current value. Can be **REFRIG** or **NON-RFRG**.
4. Push button once to change value. Once value is selected the display will show the new value. Can be **REFRIG** or **NON-RFRG**.
   - **REFRIG** - stands for refrigerated product. In this setting the flow rate is estimated at 1.0 gallon per minute.
   - **NON-RFRG** - stands for nonrefrigerated product.

   In this setting the flow rate is estimated at 1.5 gallons per minute. Both “**REFRIG**“ and “**NON-RFRG**“ simulate 1 bottle equal to 20 oz.
5. Allow approximately 4 seconds to pass and the display will return to bottle counter and be in run mode.

Resetting the Bottle Count

1. Depress the program button for approximately 2 seconds until the display changes then release. The display will change and scroll through three messages:
   - **RST FLTR** – Reset Filter Status LED
   - **RST BCNT** – Reset Bottle Count
   - **RNG SET** – Range Set for IR Sensor

   If the program button is not pushed again the display will scroll through the two messages above for three cycles and then default back to bottle count and be back in run mode.
2. When the display changes to “SETTINGS”, depress the button again. The display will change to show: “
   - **RNG SET**- Range set for IR sensor.
   - **UNIT TYP** - Type of unit (REFRIG or NON-RFRG)
   - **RST BCNT** - Reset bottle count
3. When display shows “**RST BCNT**” push program button once the display will show current value e.g. “00033183”.
4. Once display shows current value push the program button once more to reset back to 0. The display will show **BTLCT = 0** for approximately 2 seconds and then return to run mode showing 00000000 bottles.
5. Testing the bottle counter: **REFRIG** units: Place bottle or hand in front of sensor for 9.4 seconds to see bottle counter count 00000001. (This is based on filling a 20 oz. bottle) **NON-RFRG** units: Place bottle or hand in front of sensor for 6.25 seconds to see bottle counter count 00000001. (This is based on filling a 20 oz bottle)

BF11 Program: Setting the Control Board

Verify Control Board Software

1. To verify the software program of the control board the unit will need to be shut down and restarted. The chiller (if present) does not need to be shut down and restarted.
2. The units lower panel must be open to access the power cord and wall outlet.
3. Shut down the unit by unplugging the power cord from the wall outlet.
4. Restart the unit by plugging the power cord back into the wall outlet.
5. Upon start up the bottle count display will show the software designation of BF6, BF7, BF8, BF9 or BF11.
6. Reference the BF6, BF7, BF8, BF9 or BF11 instructions for setting the control board.

Accessing the Programming Button

1. To access the program button remove the top cover of the bottle filler. Remove the two (2) screws holding top cover to bottle filler with a 5/32" allen wrench . Remove top cover. Do not discard mounting screws, they will be needed to reinstall the top cover after programming operations are completed. The programming button is located at the top right side of the unit on the control board.

Reset the Filter Monitor

1. Instructions apply to filtered units only.
2. Depress the program button for approximately 2 seconds until the display changes then release. The display will change and scroll through two messages:
   - **RST FLTR** – Reset Filter Monitor
   - **SETTINGS** – System Settings Sub Menu

   If the program button is not pushed again the display will scroll through the two messages above for three cycles and then default back to bottle count and be back in run mode.
3. When the display changes to "**RST FLTR**", depress the button again. The display will change to show "**FLTR =**". Depress the button again and the display will show "**FLTR =0**"
4. The Green LED should be illuminated indicating that the visual filter monitor has been reset.

Setting the Range of the IR Sensor

1. Depress the program button for approximately 2 seconds until the display changes then release. The display will change and scroll through two messages:
   - **RST FLTR** – Reset Filter Status LED
   - **SETTINGS** – System Settings Sub Menu

   If the program button is not pushed again the display will scroll through the two messages above for three cycles and then default back to bottle count and be back in run mode.
2. When the display changes to "**SETTINGS**", depress the button again. The display will change to show:
   - **RNG SET** – Range set for IR sensor.
   - **UNIT TYP** – Type of unit (**REFRIG** or **NON-RFRG**)
   - **FLT SIZE** – Select filter capacity
   - **RST BCNT** – Reset bottle count
3. When display shows "**RNG SET**" push program button once the display will show current value (can be 1 – 10) e.g. "**RNG = 3**".
4. Once display shows current value push the program button to scroll through value of 1 – 10. Select the desired range setting.
5. Once range is selected allow approximately 4 seconds to pass and then the display will go back to bottle counter and be in run mode.
6. Test bottle filler by placing bottle or hand in front of sensor to make sure water is dispensed.

Setting the Unit Type

1. Depress the program button for approximately 2 seconds until the display changes then release. The display will change and scroll through two messages:
   - **RST FLTR** – Reset Filter Status LED
   - **SETTINGS** – System Settings Sub Menu

   If the program button is not pushed again the display will scroll through the two messages above for three cycles and then default back to bottle count and be back in run mode.
2. When the display changes to "**SETTINGS**", depress the button again. The display will change to show:
   - **RNG SET** – Range set for IR sensor.
   - **UNIT TYP** – Type of unit (**REFRIG** or **NON-RFRG**)
   - **FLT SIZE** – Select filter capacity
   - **RST BCNT** – Reset bottle count
3. When display shows "**UNIT TYPE**" push program button once the display will show current value. Can be **REFRIG** or **NON-RFRG**.
4. Push button once to change value. Once value is selected the display will show the new value. Can be **REFRIG** or **NON-RFRG**.
   - **REFRIG** – stands for refrigerated product. In this setting the flow rate is estimated at 1.0 gallon per minute.
   - **NON-RFRG**" - stands for nonrefrigerated product. In this setting the flow rate is estimated at 1.5 gallons per minute.

   Both "REFRIG" and "NON-RFRG" simulate 1 bottle equal to 20 oz.
5. Allow approximately 4 seconds to pass and the display will return to bottle counter and be in run mode.

(continues on next page)

BF11 Program: Setting the Control Board (continued)

Resetting the Bottle Count

1. Depress the program button for approximately 2 seconds until the display changes then release. The display will change and scroll through two messages:
   - **RST FLTR** – Reset Filter Status LED
   - **SETTINGS** – System Settings Sub Menu

   If the program button is not pushed again the display will scroll through the two messages above for three cycles and then default back to bottle count and be back in run mode.
2. When the display changes to "**SETTINGS**", depress the button again. The display will change to show:
   - **RNG SET** – Range set for IR sensor.
   - **UNIT TYP** – Type of unit (**REFRIG** or **NON-RFRG**)
   - **FLT SIZE** – Select filter capacity
   - **RST BCNT** – Reset bottle count
3. When display shows "**RST BCNT**" push program button once the display will show current value e.g. "00033183".
4. Once display shows current value push the program button once more to reset back to 0. The display will show "**BTLCT = 0**" for approximately 2 seconds and then return to run mode showing 00000000 bottles.
5. Testing the bottle counter:
   - **REFRIG** units: Place bottle or hand in front of sensor for 9.4 seconds to see bottle counter count 00000001. (This is based on filling a 20 oz. bottle)
   - **NON-RFRG** units: Place bottle or hand in front of sensor for 6.25 seconds to see bottle counter count 00000001.(This is based on filling a 20 oz bottle)

Setting the Filter Capacity

1. Depress the program button for approximately 2 seconds until the display changes then release. The display will change and scroll through two messages:
   - **RST FLTR** – Reset Filter Status LED
   - **SETTINGS** – System Settings Sub Menu

   If the program button is not pushed again the display will scroll through the two messages above for three cycles and then default back to bottle count and be back in run mode.
2. When the display changes to "**SETTINGS**", depress the button again. The display will change to show:
   - **RNG SET** – Range set for IR sensor.
   - **UNIT TYP** – Type of unit (**REFRIG** or **NON-RFRG**)
   - **FLT SIZE** – Select filter capacity
   - **RST BCNT** – Reset bottle count

   If the button is not pushed again the display will scroll through the four messages above for three cycles and return to run mode.
3. When display shows "**FLT SIZE**" push program button once. The display will show current value. Can be **3000GAL** or **6000GAL**.
4. Push program button again to display the desired "**FLT SIZE**".
5. Allow approximately 4 seconds to pass and the display will return to bottle counter and be in run mode.